FPQ 150
REFUELLER VANE PUMP

goind.com.au

SELF PRIMING VANE PUMP

Depending on selected pump size up to 4000 l/min with Δp = 8 bar

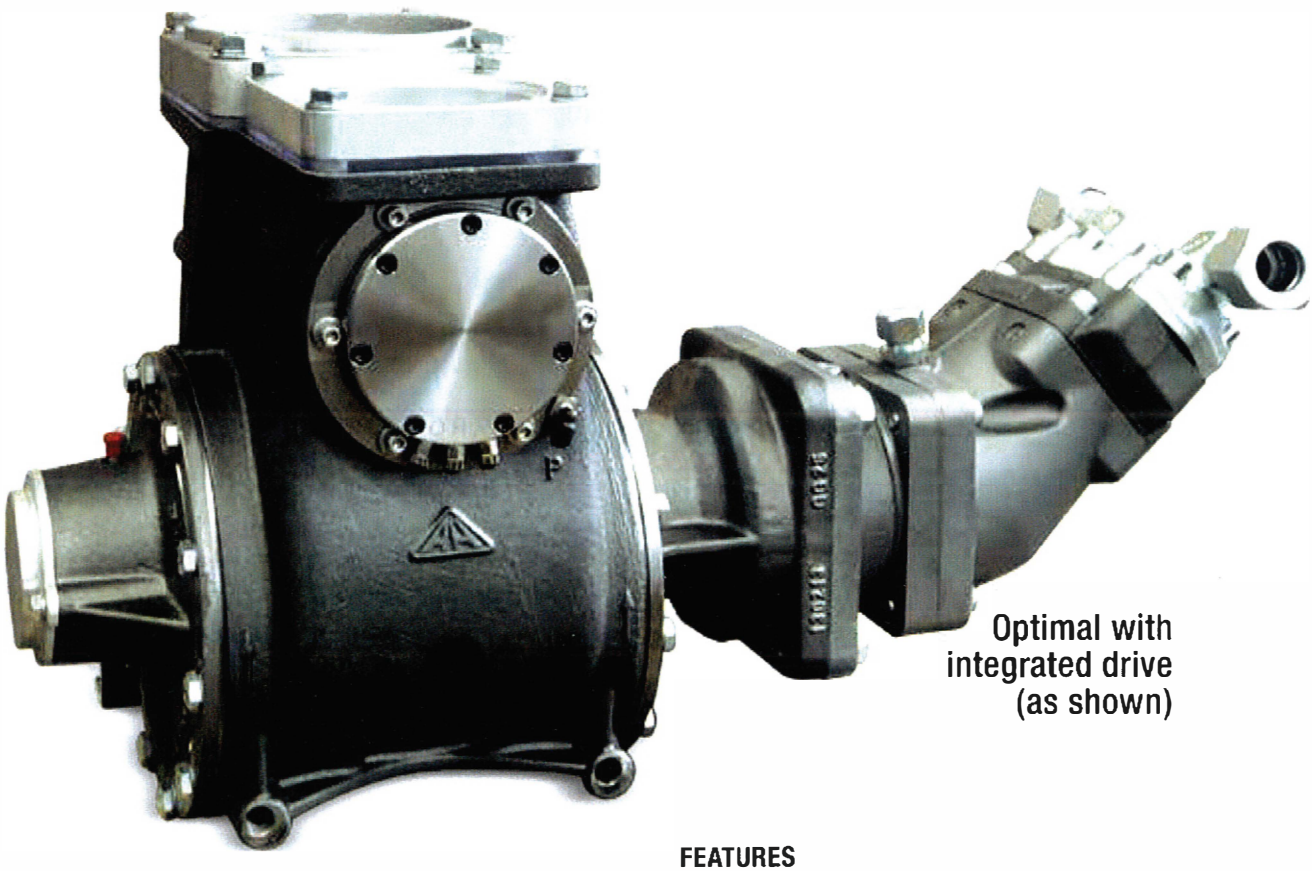

Optimal with integrated drive (as shown)

Ex II 2G cT3 CE certified.
Operation without a flame arrestor is possible in compliance with the certified ATEX conditions.

FEATURES

- High efficiency
- Low noise emission
- Small size
- Light weight

  By current modelling using numerical methods
- Pneumatic (remote controllable) or wire spring bypass valve

FPQ 150
REFUELLER VANE PUMP

goind.com.au

DIMENSIONS

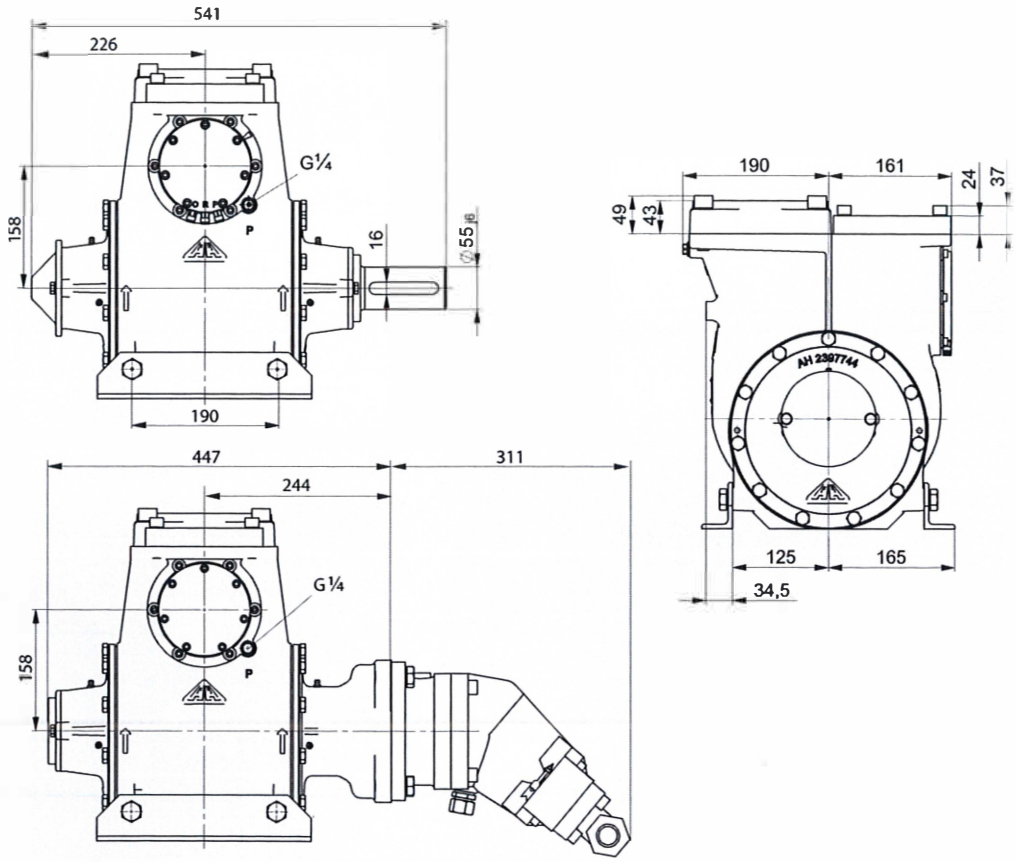

FLOW RATE

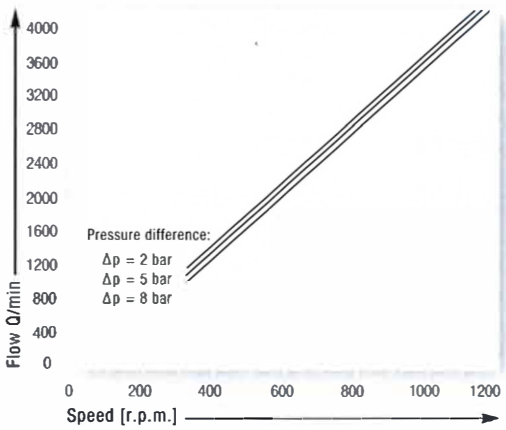

POWER CONSUMPTION

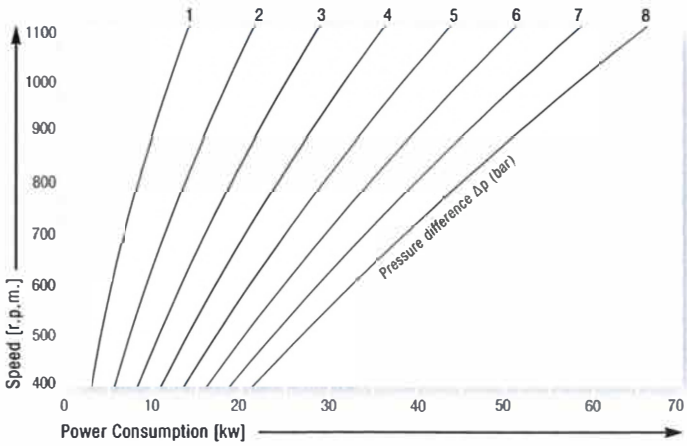

CSt for thin liquids with viscosities up to about 12cSt, such as Diesel and gasoline fuels.

ALFONS HAAR MASCHINENBAU GMBH & CO. KG • Fangdieckstrasse 67 • D-22547 Hamburg • TEL +49 40 83391-0 • FAX +49 40 844910
INTERNET www.alfons-haar.de • E-MAIL sales@alfons-haar.de