Instructions–Parts List

ACETAL AND POLYPROPYLENE

Husky™ 307 Air–Operated Diaphragm Pumps

308553ZAD
EN

For fluid transfer applications. For professional use only.

Only pumps with acetal fluid sections are approved for use in European explosive atmosphere locations.

100 psi (0.7 MPa, 7 bar) Maximum Fluid Working Pressure
100 psi (0.7 MPa, 7 bar) Maximum Air Input Pressure

***Model No. D31____ Acetal Pumps**, Series F**
***Model No. D32____ Polypropylene Pumps, Series F**
***Model No. D3A____ Acetal BSPT Pumps**, Series F**
***Model No. D3B____ Polypropylene BSPT Pumps, Series F**

* To determine the Model No. for your pump and for additional models, refer to the Pump Matrix on page 26.

** Pumps with Acetal fluid sections are Ex II 2 GD c IIC T4 certified.

Important Safety Instructions
Read all warnings and instructions in this manual.
Save these instructions.

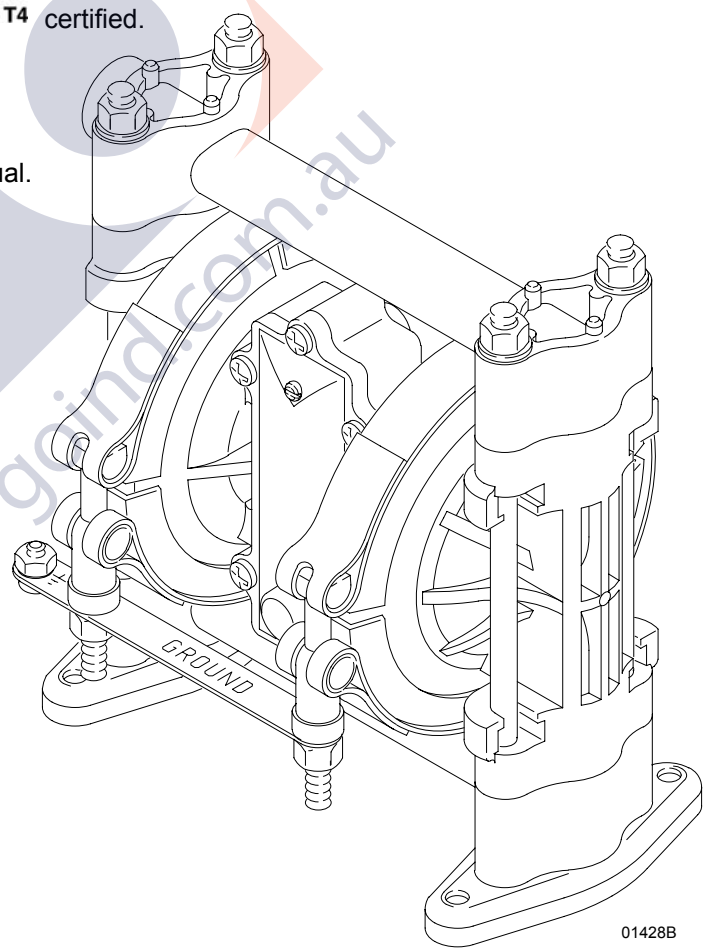

01428B

PROVEN QUALITY. LEADING TECHNOLOGY.

goind.com.au

Table of Contents

Warnings 2
Installation 4
Operation 11
Troubleshooting 12
Maintenance 14
Service
- Replacing the Air Valve 16
- Repairing the Air Valve 18
- Ball Check Valves 21
- Diaphragm Repair 23

Pump Matrix 26
Additional Diaphragm Pumps 26
Repair Kit Matrix 27
Parts 28
Torque Sequence 32
Technical Data and Performance Charts 33
Dimensions 35
Graco Warranties 36
Graco Information 36

Symbols

Warning Symbol

⚠ WARNING

This symbol alerts you to the possibility of serious injury or death if you do not follow the instructions.

Caution Symbol

⚠ CAUTION

This symbol alerts you to the possibility of damage to or destruction of equipment if you do not follow the instructions.

⚠ WARNING

INSTRUCTIONS

EQUIPMENT MISUSE HAZARD

Equipment misuse can cause the equipment to rupture or malfunction and result in serious injury.

- This equipment is for professional use only.
- Read all instruction manuals, tags, and labels before operating the equipment.
- Use the equipment only for its intended purpose. If you are not sure, call your Graco distributor.
- Do not alter or modify this equipment. Use only genuine Graco parts and accessories.
- Check equipment daily. Repair or replace worn or damaged parts immediately.
- Do not exceed the maximum working pressure of the lowest rated component in your system. This equipment has a **100 psi (0.7 MPa, 7 bar) maximum working pressure at 100 psi (0.7 MPa, 7 bar) maximum incoming air pressure.**
- Use fluids and solvents which are compatible with the equipment wetted parts. Refer to the **Technical Data** section of all equipment manuals. Read the fluid and solvent manufacturer's warnings.
- Do not kink or overbend hoses or use hoses to pull equipment.
- Route hoses away from traffic areas, sharp edges, moving parts, and hot surfaces. Do not expose Graco hoses to temperatures above 82° C (180° F) or below –40° C (–40° F).
- Do not lift pressurized equipment.
- Comply with all applicable local, state, and national fire, electrical, and safety regulations.

goind.com.au

⚠ WARNING

TOXIC FLUID HAZARD

Hazardous fluid or toxic fumes can cause serious injury or death if splashed in the eyes or on the skin, inhaled, or swallowed.

- Know the specific hazards of the fluid you are using.
- Store hazardous fluid in an approved container. Dispose of hazardous fluid according to all local, state and national guidelines.
- Always wear protective eyewear, gloves, clothing and respirator as recommended by the fluid and solvent manufacturer.
- Pipe and dispose of the exhaust air safely, away from people, animals, and food handling areas. If the diaphragm fails, the fluid is exhausted along with the air. See **Air Exhaust Ventilation** on page 10.
- To pump acids, ***always*** use a polypropylene pump. Take precautions to avoid acid or acid fumes from contacting the pump housing exterior. Stainless steel parts will be damaged by exposure to acid spills and fumes. ***Never*** use an acetal pump to pump acids.

FIRE AND EXPLOSION HAZARD

Improper grounding, poor ventilation, open flames or sparks can cause a hazardous condition and result in a fire or explosion and serious injury.

- Ground the equipment. Refer to **Grounding** on page 5.
- ***Never*** use a polypropylene pump with non-conductive flammable fluids as specified by your local fire protection code. Refer to **Grounding** on page 5 for additional information. Consult your fluid supplier to determine the conductivity or resistivity of your fluid.
- If there is any static sparking or you feel an electric shock while using this equipment, **stop pumping immediately.** Do not use the equipment until you identify and correct the problem.
- Provide fresh air ventilation to avoid the buildup of flammable fumes from solvents or the fluid being pumped.
- Pipe and dispose of the exhaust air safely, away from all sources of ignition. If the diaphragm fails, the fluid is exhausted along with the air. See **Air Exhaust Ventilation** on page 10.
- Keep the work area free of debris, including solvent, rags, and gasoline.
- Electrically disconnect all equipment in the work area.
- Extinguish all open flames or pilot lights in the work area.
- Do not smoke in the work area.
- Do not turn on or off any light switch in the work area while operating or if fumes are present.
- Do not operate a gasoline engine in the work area.
- Keep a fire extinguisher in the work area.

grind.com.au

Installation

General Information

- The Typical Installations in Fig. 4 to Fig. 7 are only guides for selecting and installing system components. Contact your Graco distributor for assistance in planning a system to suit your needs.

- Always use Genuine Graco Parts and Accessories, available from your Graco distributor. Refer to the Product Data Sheet for the pump, Form No. 305528 (acetal pumps) or 305543 (polypropylene pumps). If you supply your own accessories, be sure they are adequately sized and pressure rated for your system.

- Use a compatible, liquid thread sealant or PTFE tape on all male threads. Tighten all connections firmly to avoid air or fluid leaks. ***Do not overtighten plastic threads.***

- Reference numbers and letters in parentheses refer to the callouts in the Figures and the parts lists on pages 28 to 29.

⚠ WARNING

TOXIC FLUID HAZARD
Hazardous fluid or toxic fumes can cause serious injury or death if splashed in the eyes or on the skin, inhaled, or swallowed.

1. Read **TOXIC FLUID HAZARD** on page 3.
2. Use fluids and solvents which are compatible with the equipment wetted parts. Refer to the **Technical Data** section of all equipment manuals. Read the fluid and solvent manufacturer's warnings.

⚠ CAUTION

Safe Operating Temperature
Minimum: 40° F (4.4° C); Maximum: 150° F (66° C).

Operating outside these temperature limits will adversely affect the strength of the pump housing. Certain chemicals may further reduce the operating temperature range. Consult engineering guides for chemical compatibilities and temperature limits, or contact your Graco distributor.

Tightening Threaded Fasteners Before First Use

Before using the pump for the first time, check and retorque all external fasteners. See **Torque Sequence**, page 32. After the first day of operation, retorque the fasteners. Although pump use varies, a general guideline is to retorque fasteners every two months.

Mountings

- Be sure the mounting can support the weight of the pump, hoses, and accessories, as well as the stress caused during operation.

- The Husky 307 Pump can be used in a variety of installations, some of which are shown in Fig. 4 to Fig. 7. Kits are available to adapt your pump to your system. Refer to the Product Data Sheet for the pump, Form No. 305528 (acetal pumps) or 305543 (polypropylene pumps).

- For all other mountings, be sure the pump is adequately secured.

Dual Manifolds

Dual manifold kits are available to enable you to pump two fluids simultaneously, or to mix two fluids in the pump. Order Part No. 237211 for acetal pumps and Part No. 237210 for polypropylene pumps.

Installation

Grounding

⚠ WARNING

FIRE AND EXPLOSION HAZARD
This pump must be grounded. Before operating the pump, ground the system as explained at right. Also read the section **FIRE AND EXPLOSION HAZARD** on page 3.

The acetal pump contains stainless steel fibers, which makes the wetted parts conductive. Attaching the ground wire to the grounding strip grounds the air motor and the wetted parts.

The polypropylene pump is ***not*** conductive.

When pumping conductive flammable fluids, ***always*** ground the entire fluid system by making sure the fluid system has an electrical path to a true earth ground (see Fig. 4 through Fig. 7). ***Never*** use a polypropylene pump with non-conductive flammable fluids as specified by your local fire protection code.

US Code (NFPA 77 Static Electricity) recommends a conductivity greater than 50 x 10^{-12} Siemans/meter (mhos/meter) over your operating temperature range to reduce the hazard of fire. Consult your fluid supplier to determine the conductivity or resistivity of your fluid. The resistivity must be less than 2 x 10^{12} ohm-centimeters.

To reduce the risk of static sparking, ground the pump and all other equipment used or located in the pumping area. Check your local electrical code for detailed grounding instructions for your area and type of equipment.

Ground all of this equipment:

- *Pump*: Attach a ground wire (Y) to the grounding strip (112) with the screw (28), lockwasher (29) and nut (27), as shown in Fig. 1. Connect the clamp end of the ground wire to a true earth ground. Order Part No. 222011 Ground Wire and Clamp.

NOTE: When pumping conductive flammable fluids with a polypropylene pump, ***always*** ground the fluid system. See the **WARNING** at left. Fig. 4 through Fig. 7 show recommended methods of grounding flammable fluid containers during filling.

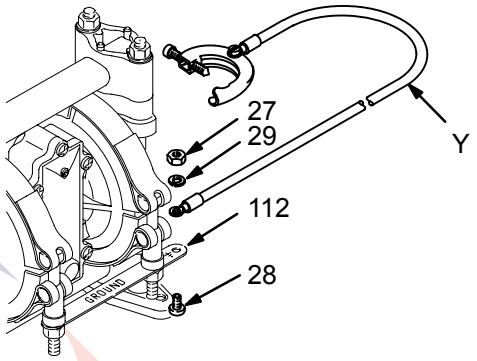

Fig. 1

- *Air and fluid hoses*: Use only electrically conductive hoses.
- *Air compressor*: Follow the manufacturer's recommendations.
- *Solvent pails used when flushing*: Follow your local code. Use only metal pails, which are conductive. Do not place the pail on a non-conductive surface, such as paper or cardboard, which interrupts the grounding continuity.
- *Fluid supply container:* Follow your local code.

goinducom.au

Installation

Air Line

⚠ WARNING

A bleed-type master air valve (B) is required in your system to relieve air trapped between this valve and the pump. See Fig. 4 to Fig. 7. Trapped air can cause the pump to cycle unexpectedly, which could result in serious injury, including splashing in the eyes or on the skin, injury from moving parts, or contamination from hazardous fluids.

⚠ CAUTION

The pump exhaust air may contain contaminants. Ventilate to a remote area if the contaminants could affect your fluid supply. See **Air Exhaust Ventilation** on page 10.

1. Install the air line accessories as shown in Fig. 4 to Fig. 7. Mount these accessories on the wall or on a bracket. Be sure the air line supplying the accessories is grounded.

   a. The fluid pressure can be controlled in either of two ways. To control it on the air side, install an air regulator (H). To control it on the fluid side, install a fluid regulator (M) near the pump fluid outlet (see Fig. 5).

   b. Locate one bleed-type master air valve (B) close to the pump and use it to relieve trapped air. See the **WARNING** above. Locate the other master air valve (E) upstream from all air line accessories and use it to isolate them during cleaning and repair.

   c. The air line filter (F) removes harmful dirt and moisture from the compressed air supply.

2. Install an electrically conductive, flexible air hose (C) between the accessories and the 1/4 npt(f) pump air inlet (see Fig. 2). Use a minimum 1/4" (6.3 mm) ID air hose. Screw an air line quick disconnect coupler (D) onto the end of the air hose (C), and screw the mating fitting into the pump air inlet snugly. Do not connect the coupler (D) to the fitting yet.

Fluid Suction Line

- If using a conductive (acetal) pump, use conductive hoses. If using a non-conductive (polypropylene) pump, ground the fluid system. See **Grounding** on page 5.
- The pump fluid inlet is 3/8 npt(f). See Fig. 2. Screw the fluid fitting into the pump inlet snugly. Use a compatible liquid thread sealant or PTFE tape on connections to prevent air from getting into material line.
- At inlet fluid pressures greater than 15 psi (0.1 MPa,1 bar), diaphragm life will be shortened.
- See the **Technical Data** on pages 33 and 34 for maximum suction lift and flow rate loss at various lift distances.

Fluid Outlet Line

⚠ WARNING

A fluid drain valve (J) is required in your system to relieve pressure in the hose if it is plugged. See Fig. 4 to Fig. 7. The drain valve reduces the risk of serious injury, including splashing in the eyes or on the skin, or contamination from hazardous fluids when relieving pressure. Install the valve close to the pump fluid outlet.

- Use electrically conductive fluid hoses (N). The pump fluid outlet is 3/8 npt(f). See Fig. 2. Screw the fluid fitting into the pump outlet snugly.
- Install a fluid regulator (M) at the pump fluid outlet to control fluid pressure, if desired (see Fig. 5). See **Air Line,** step 1a, for another method of controlling pressure.
- Install a fluid drain valve (J) near the fluid outlet. See the **WARNING** above.

goind.com.au

Installation

Changing the Orientation of the Fluid Inlet and Outlet Ports

The pump is shipped with the fluid inlet and outlet ports facing the same direction. See Fig. 2. If desired, the direction of one or both ports can be changed. Remove the manifold(s) from the pump as explained in steps 1, 2, and 4 on page 21. Reattach with the port facing the desired direction. See **Torque Sequence**, page 32. ***Do not over-torque.***

Acetal Pump Shown

1. Apply thread lube, and torque to 50 to 60 in-lb (5.6 to 6.8 N-m). See **Torque Sequence**, page 32. Do not over-torque.
2. 1/4 npt(f) air inlet
3. 3/8 npt(f) fluid inlet
4. 3/8 npt(f) fluid outlet
5. 3/8 npt(f) air exhaust port

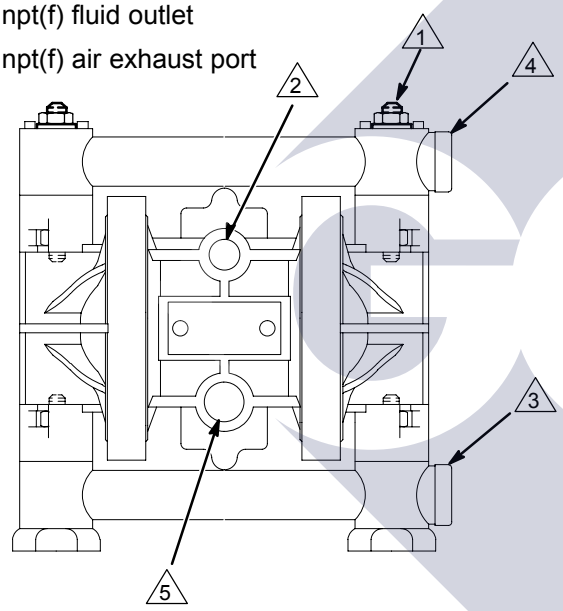

Fig. 2

Fluid Pressure Relief Valve

⚠ CAUTION

Some systems may require installation of a pressure relief valve at the pump outlet to prevent overpressurization and rupture of the pump or hose. See Fig. 3.

Thermal expansion of fluid in the outlet line can cause overpressurization. This can occur when using long fluid lines exposed to sunlight or ambient heat, or when pumping from a cool to a warm area (for example, from an underground tank).

Overpressurization can also occur if the Husky pump is being used to feed fluid to a piston pump, and the intake valve of the piston pump does not close, causing fluid to back up in the outlet line.

KEY

A 3/8 npt(f) fluid inlet port
B 3/8 npt(f) fluid outlet port
C Pressure relief valve
Part No. 112119 (stainless steel)

1. Install valve between fluid inlet and outlet ports.
2. Connect fluid inlet line here. Use a compatible liquid thread sealant or PTFE tape on connection to prevent air from getting into the material line.
3. Connect fluid outlet line here.

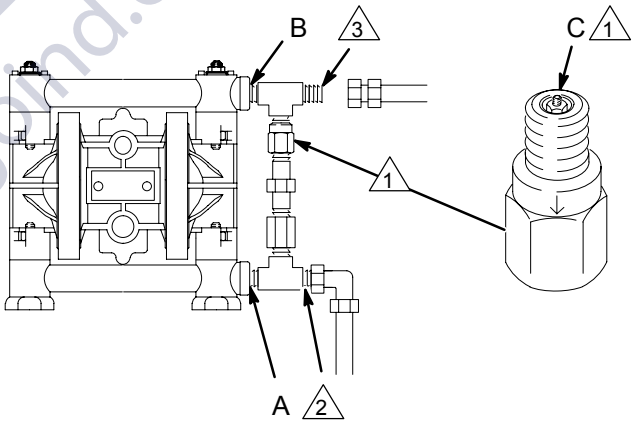

Fig. 3

gomd.com.au

Installation

STAND-MOUNTED AIR SPRAY INSTALLATION

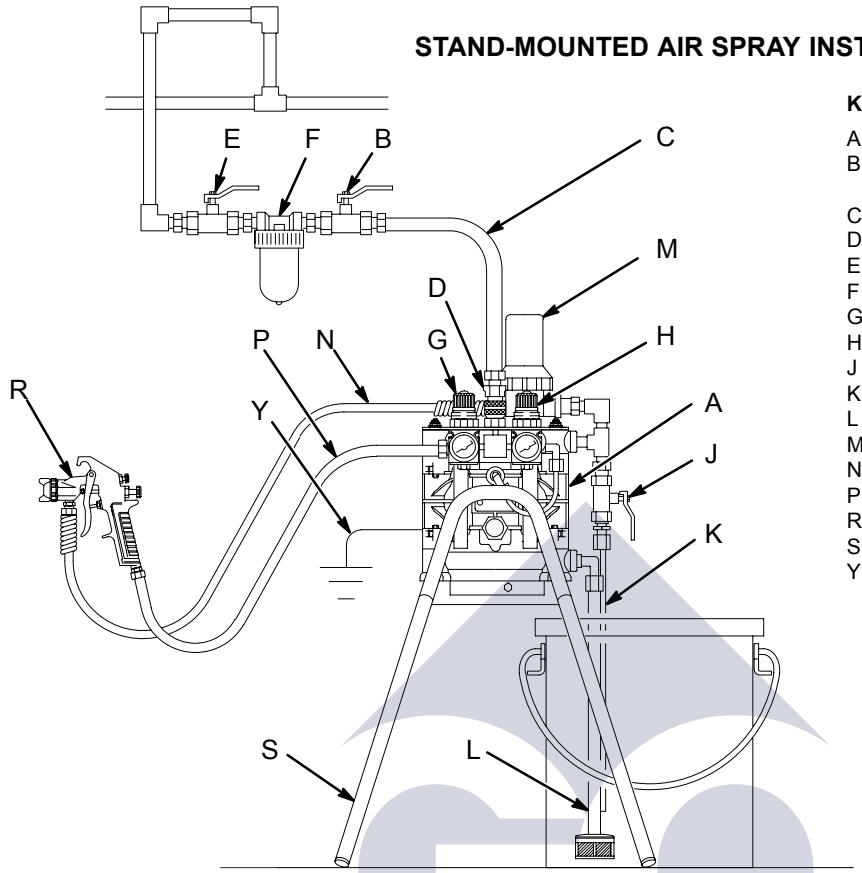

KEY

- A Husky 307 Pump
- B Bleed-Type Master Air Valve (required for pump)
- C Air Supply Hose
- D Air Line Quick Disconnect
- E Master Air Valve (for accessories)
- F Air Line Filter
- G Gun Air Regulator
- H Pump Air Regulator
- J Fluid Drain Valve (required)
- K Fluid Recirculation Line
- L Fluid Suction Line
- M Surge Tank and Filter
- N Fluid Supply Hose
- P Gun Air Supply Hose
- R Air Spray Gun
- S Floor Stand
- Y Ground Wire (required; see page 5 for installation instructions)

01433B

Fig. 4

PAIL-MOUNTED HVLP AIR SPRAY INSTALLATION

KEY

- A Husky 307 Pump
- B Bleed-Type Master Air Valve (required for pump)
- C Air Supply Line
- D Air Line Quick Disconnect
- E Master Air Valve (for accessories)
- F Air Line Filter
- G Gun Air Regulator
- H Pump Air Regulator
- J Fluid Drain Valve (required)
- K Agitator
- L Fluid Suction Line
- M Fluid Regulator
- N Fluid Supply Hose
- P Gun Air Supply Hose
- R HVLP Air Spray Gun
- S Pail Cover
- Y Ground Wire (required; see page 5 for installation instructions)

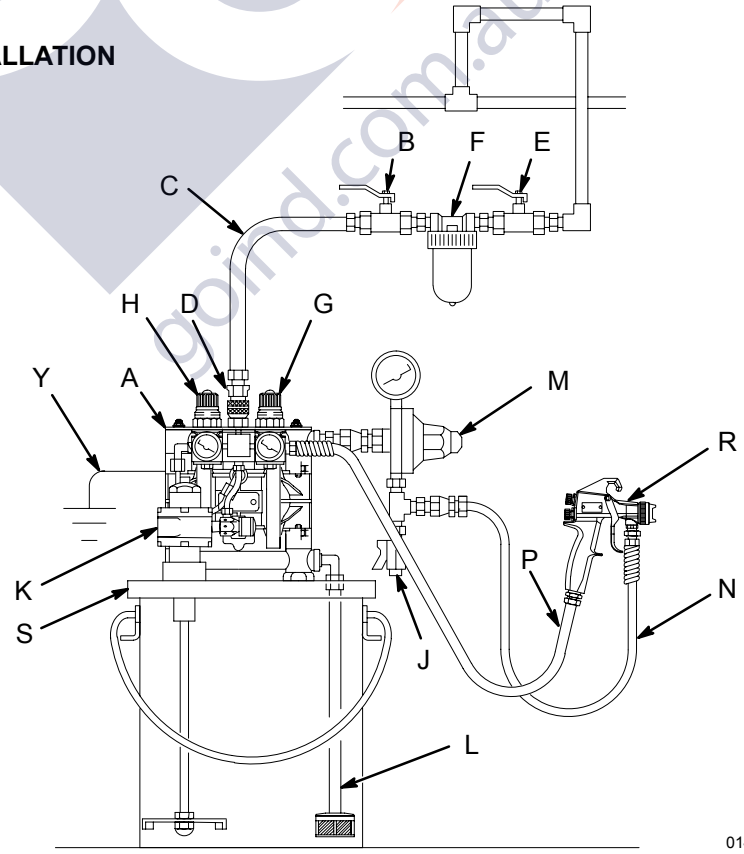

01434B

Fig. 5

Installation

BUNG-MOUNT TRANSFER INSTALLATION

KEY

A Husky 307 Pump
B Bleed-Type Master Air Valve (required for pump)
C Air Supply Line
D Air Line Quick Disconnect
E Master Air Valve (for accessories)
F Air Line Filter
H Pump Air Regulator
J Fluid Drain Valve (required)
L Fluid Suction Line
M Fluid Inlet Filter
N Fluid Supply Hose
Y Ground Wire (required; see page 5 for installation instructions)

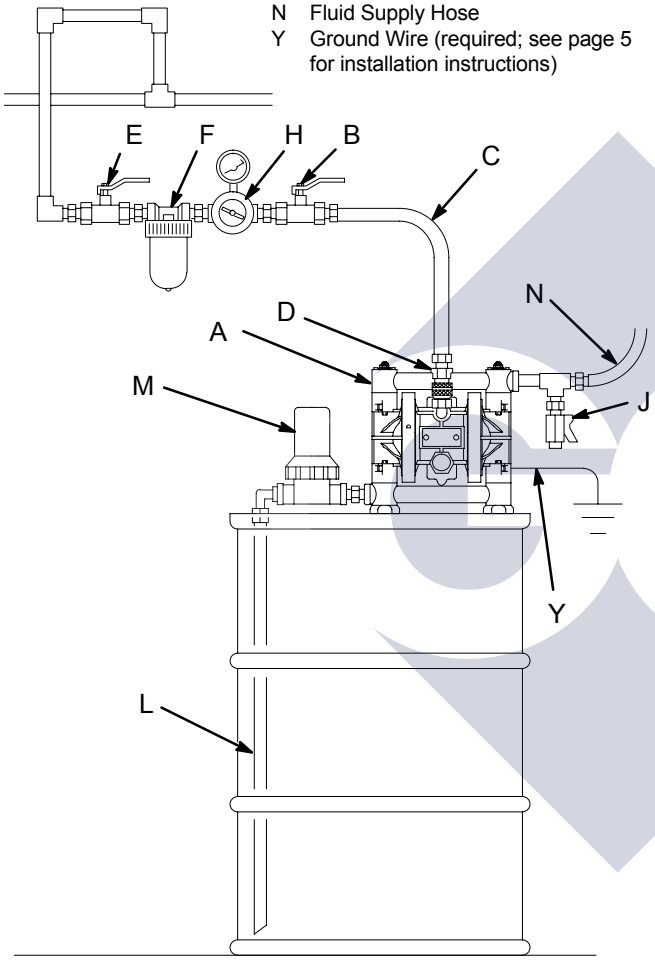

Fig. 6 01444B

WALL-MOUNT TRANSFER INSTALLATION

KEY

A Husky 307 Pump
B Bleed-Type Master Air Valve (required for pump)
C Air Supply Line
D Air Line Quick Disconnect
E Master Air Valve (for accessories)
F Air Line Filter
H Pump Air Regulator
J Fluid Drain Valve (required)
L Fluid Suction Line
N Fluid Supply Hose
S Wall Bracket
T Bung Adapter
Y Ground Wire (required; see page 5 for installation instructions)

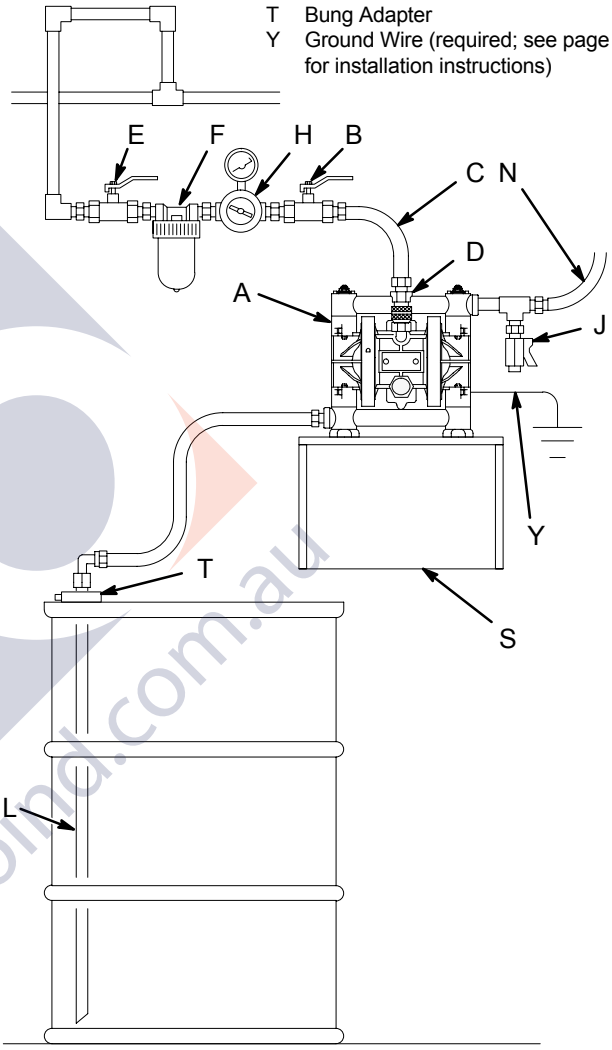

Fig. 7 01457B

goind.com.au

Installation

Air Exhaust Ventilation

⚠ WARNING

FIRE AND EXPLOSION HAZARD
Be sure to read **FIRE OR EXPLOSION HAZARD** and **TOXIC FLUID HAZARD** on page 3, before operating this pump.

Be sure the system is properly ventilated for your type of installation. You must vent the exhaust to a safe place, away from people, animals, food handling areas, and all sources of ignition when pumping flammable or hazardous fluids.

Diaphragm failure will cause the fluid being pumped to exhaust with the air. Place an appropriate container at the end of the air exhaust line to catch the fluid. See Fig. 8.

The air exhaust port is 3/8 npt(f). Do not restrict the air exhaust port. Excessive exhaust restriction can cause erratic pump operation.

To exhaust to a remote location:

1. Remove the muffler (11) from the pump air exhaust port.

⚠ WARNING

PRESSURIZED EQUIPMENT HAZARD
To reduce the risk of serious eye injury from ice particles, *never* operate the pump with the air exhaust port open. Ice may form during pump operation, and ice particles will be ejected from the port along with the exhaust air. If the muffler (11) is removed, *always* connect an air exhaust hose to the exhaust port.

2. Install an electrically conductive air exhaust hose (X) and connect the muffler to the other end of the hose. The minimum size for the air exhaust hose is 3/8 in. (10 mm) ID. If a hose longer than 15 ft (4.57 m) is required, use a larger diameter hose. Avoid sharp bends or kinks in the hose.

3. Place a container (Z) at the end of the air exhaust line to catch fluid in case a diaphragm ruptures. If the fluid is flammable, ground the container. See Fig. 8.

VENTING EXHAUST AIR (Submerged Installation Shown)
See Fig. 4 for accessories

In a submerged installation (as shown), all wetted and non-wetted pump parts must be compatible with the fluid being pumped.

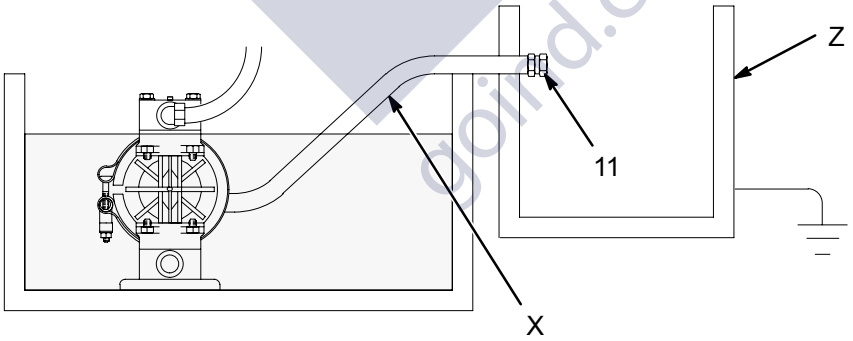

Fig. 8

goind.com.au

Operation

Pressure Relief Procedure

PRESSURIZED EQUIPMENT HAZARD
The system pressure must be manually relieved to prevent the system from starting or spraying accidentally. To reduce the risk of an injury from accidental spray from the gun, splashing fluid, or moving parts, follow the **Pressure Relief Procedure** whenever you

- Are instructed to relieve the pressure
- Stop spraying
- Check or service any of the system equipment
- Install or clean the spray tips

1. Shut off the air to the pump.
2. Open the dispensing valve, if used.
3. Open the fluid drain valve to relieve all fluid pressure, having a container ready to catch the drainage.

Flush the Pump Before First Use

The pump was tested in water. If water could contaminate the fluid you are pumping, flush the pump thoroughly with a compatible solvent. Follow the steps under **Starting and Adjusting the Pump.**

Starting and Adjusting the Pump

WARNING

TOXIC FLUID HAZARD
Hazardous fluid or toxic fumes can cause serious injury or death if splashed in the eyes or on the skin, inhaled, or swallowed. Do not lift a pump under pressure. If dropped, the fluid section may rupture. Always follow the **Pressure Relief Procedure** above before lifting the pump.

1. Be sure the pump is properly grounded. Read **FIRE OR EXPLOSION HAZARD** on page 3.
2. Check all fittings to be sure they are tight. Be sure to use a compatible liquid thread sealant or PTFE tape on all male threads. Tighten the fluid inlet and outlet fittings snugly. Do not overtighten the fittings into the pump.
3. Place the suction tube (if used) in the fluid to be pumped.
4. Place the end of the fluid hose (N) into an appropriate container. Close the fluid drain valve (J).
5. With the pump air regulator (H) closed, open all bleed-type master air valves (B, E).
6. If the fluid hose has a dispensing device, hold it open while continuing with the following step. Slowly open the air regulator (H) until the pump starts to cycle. Allow the pump to cycle slowly until all air is pushed out of the lines and the pump is primed.

   If you are flushing, run the pump long enough to thoroughly clean the pump and hoses. Close the air regulator. Remove the suction tube from the solvent and place it in the fluid to be pumped.

Pump Shutdown

WARNING

To reduce the risk of serious injury whenever you are instructed to relieve pressure, always follow the **Pressure Relief Procedure** at left.

At the end of the work shift, **relieve the pressure.**

gond.com.au

Troubleshooting

⚠ WARNING

To reduce the risk of serious injury whenever you are instructed to relieve pressure, always follow the **Pressure Relief Procedure** on page 11.

1. **Relieve the pressure** before checking or servicing the equipment.

2. Check all possible problems and causes before disassembling the pump.

PROBLEM	CAUSE	SOLUTION
The pump will not cycle, or cycles once and stops.	The air valve is stuck or dirty.	Turn the reset shaft (21). Disassemble and clean the air valve. See pages 18, 19. Use filtered air.
	The detent link (22) is worn or broken.	Replace the detent link (22) and ball (8). See pages 18, 19.
	The springs (3, 6) and/or valve cup (5) and plate (13) are broken or damaged.	Replace these parts. See pages 18, 19.
The pump cycles at stall or fails to hold pressure at stall.	The check valves or o-rings (108) are leaking.	Replace these parts. See page 21.
	The check balls (301) or seat (201) are worn.	Replace these parts. See page 21.
	The check ball (301) is wedged in the seat (201).	Replace the ball. See page 21.
There is excessive air leakage from the exhaust port.	The air valve cup (5) or plate (13) is worn.	Replace these parts. See pages 18, 19.
	The shaft seals (30‡) are worn.	Replace the seals. See page 23.
The pump operates erratically.	The suction line is clogged.	Inspect; clear the line.
	The check valve balls (301) are sticking or leaking.	Clean or replace the balls. See page 21.
	The diaphragm (401) is ruptured.	Replace the diaphragm. See page 23.

goindom.au

Troubleshooting

PROBLEM	CAUSE	SOLUTION
There are air bubbles in the fluid.	The suction line is loose, or there is a lack of thread sealant.	Tighten the suction line. Use a compatible liquid thread sealant or PTFE tape on connections.
	The diaphragm (401) is ruptured.	Replace the diaphragm. See page 23.
	The manifolds (102) are loose or the o-rings (108) are damaged.	Tighten the manifold bolts (104) or nuts (106); replace the o-rings (108). See page 21.
	The outer diaphragm plates (103) are loose.	Tighten the plates. See page 23.
There is fluid in the exhaust air.	The diaphragm (401*) is ruptured.	Replace the diaphragm. See page 23.
	The outer diaphragm plates (103) are loose.	Tighten the plates. See page 23.
The pump exhausts air at stall.	The air valve cup (5) or plate (13) is worn.	Replace these parts. See pages 18, 19.
	The shaft seals (30‡) are worn.	Replace the seals. See page 23.
The pump exhausts air from the clamps.	The clamps (111) are loose.	Tighten the clamp nuts (113). See page 14.
The pump exhausts air near the air valve.	The air valve screws (15) are loose.	Tighten the screws. See page 16.
	The air valve o-ring (19) is damaged.	Inspect; replace the o-ring. See pages 18, 19.
The pump leaks fluid from the check valves.	The o-rings (108) are worn or damaged.	Inspect; replace the o-rings. See page 21.

goind.com.au

Maintenance

Lubrication

The air valve is designed to operate unlubricated, however if lubrication is desired, every 500 hours of operation (or monthly) remove the hose from the pump air inlet and add two drops of machine oil to the air inlet.

⚠ CAUTION

Do not over-lubricate the pump. Oil is exhausted through the muffler, which could contaminate your fluid supply or other equipment. Excessive lubrication can also cause the pump to malfunction.

Flushing and Storage

⚠ WARNING

To reduce the risk of serious injury whenever you are instructed to relieve pressure, always follow the **Pressure Relief Procedure** on page 11.

Flush the pump when necessary to prevent the fluid you are pumping from drying or freezing in the pump and damaging it. Use a compatible solvent.

Before storing the pump, always flush the pump and **relieve the pressure.**

Tightening Threaded Connections

Before each use, check all hoses for wear or damage, and replace as necessary. Check to be sure all threaded connections are tight and leak-free.

Check fasteners. Tighten or retorque as necessary. Although pump use varies, a general guideline is to retorque fasteners every two months. See Torque Sequence, page 32.

Tightening the Clamps

When tightening the clamps (111), apply thread lubricant to the bolts and ***be sure*** to torque the nuts (113) to 50 to 60 in-lb (5.6 to 6.8 N•m). See Fig. 9. See **Torque Sequence**, page 32.

⚠1 Apply thread lube and torque nuts to 50 to 60 In-lb (5.6 to 6.8 N•m). See **Torque Sequence**, page 32.

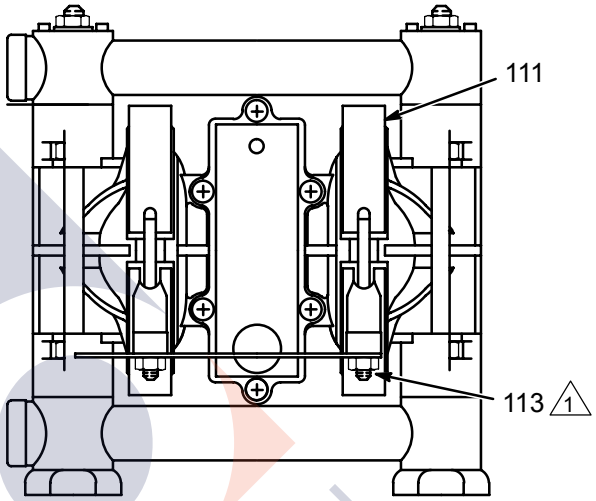

Fig. 9

Preventive Maintenance Schedule

Establish a preventive maintenance schedule, based on the pump's service history. This is especially important for prevention of spills or leakage due to diaphragm failure.

spindcom.au

Notes

goind.com.au

Replacing the Air Valve

Tools Required

- Torque wrench
- Phillips screwdriver
- O-ring pick

NOTE: Air Valve Kit 239952 is available. Parts included in the kit are marked with a dagger, for example (2†). A tube of general purpose grease (26†) is supplied in the kit. Install the kit as follows.

⚠ WARNING

To reduce the risk of serious injury whenever you are instructed to relieve pressure, always follow the **Pressure Relief Procedure** on page 11.

1. **Relieve the pressure.**
2. Unscrew the six mounting screws (15) and remove the air valve (A) from the pump. See Fig. 10.
3. Refer to the Valve Plate Detail in Fig. 10. Remove the two screws (10) holding the valve plate (13) to the pump. Use an o-ring pick to remove the valve plate, seal (12), and bearing (9).
4. Apply grease (26†) to the bearing (9†). Install the bearing and the seal (12) in the pump housing (1). Install the valve plate (13) and secure with the two screws (10†), as shown. Torque the screws to 5 to 7 in-lb (0.6 to 0.8 N-m).
5. Make certain the o-ring (19†) is in place on the air valve cover (2†).
6. Apply grease (26†) where shown in Fig. 10.
7. Align the new air valve assembly so the reset shaft (21†) is at the top. Install the valve on the pump, making sure the valve saddle (14†) engages the recessed area on the diaphragm shaft (23). Install the six screws (15) and torque oppositely and evenly, to 8 to 14 in-lb (0.9 to 1.6 N-m).

goind.com.au

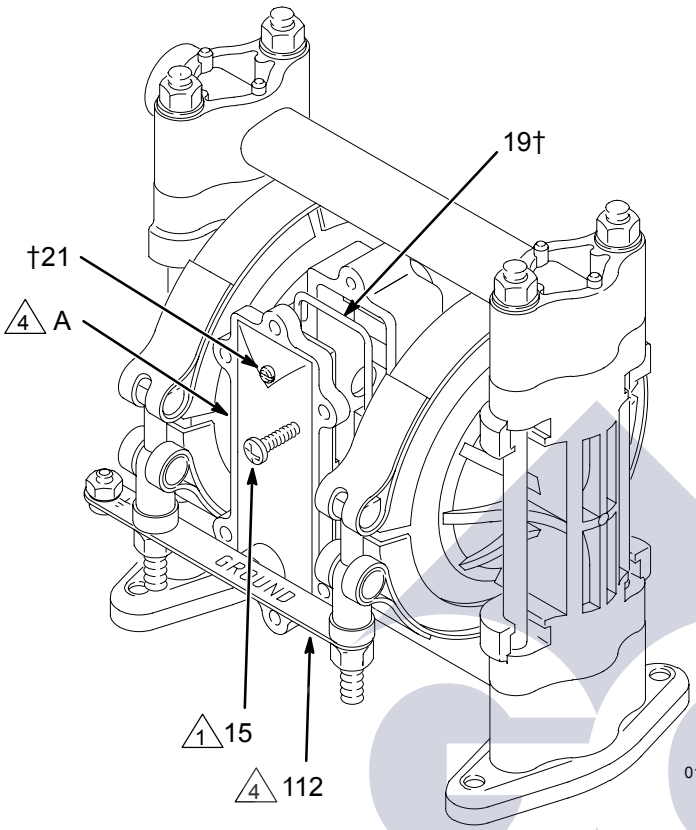

VALVE PLATE DETAIL

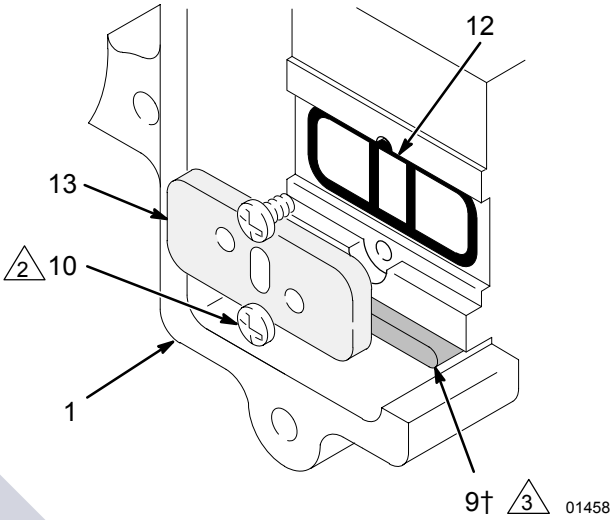

GREASE APPLICATION

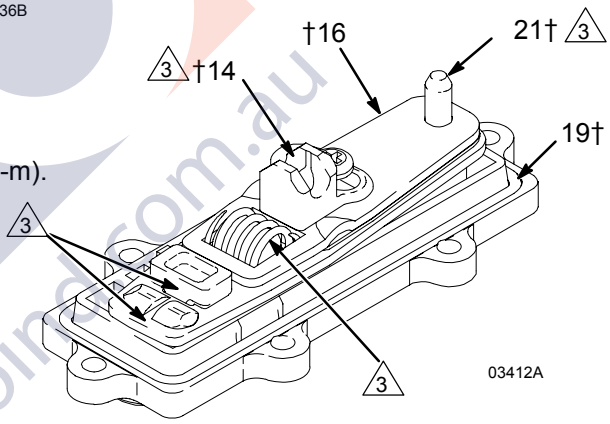

1 Torque oppositely and evenly to 8 to 14 in-lb (0.9 to 1.6 N-m).

2 Torque to 5 to 7 in-lb (0.6 to 0.8 N-m).

3 Apply grease (26†).

Fig. 10

goindcom.au

Repairing the Air Valve

Tools Required

- Torque wrench
- Phillips screwdriver
- O-ring pick
- Rubber mallet

Disassembly

⚠ WARNING

To reduce the risk of serious injury whenever you are instructed to relieve pressure, always follow the **Pressure Relief Procedure** on page 11.

1. **Relieve the pressure.**
2. Remove the air valve from the pump (see page 16).
3. Remove the screw (15) and shift saddle (14). See Fig. 11.
4. Disassemble the link assembly, consisting of the actuator link (16), spacer (17), detent link (22), spring (3), stop (4), and valve cup (5).
5. Remove the detent ball (8) and spring (6). The detent collar (7) is a press-fit and should not need removal; if it does require replacement, you should also replace the cover (2).
6. Remove the reset shaft (21), o-ring (20) and washer (18).
7. Clean all parts and inspect for wear or damage. Replace as needed. See **Reassembly,** page 19.

NOTE: ALL PARTS SHOWN ARE INCLUDED IN AIR VALVE KIT 239952.

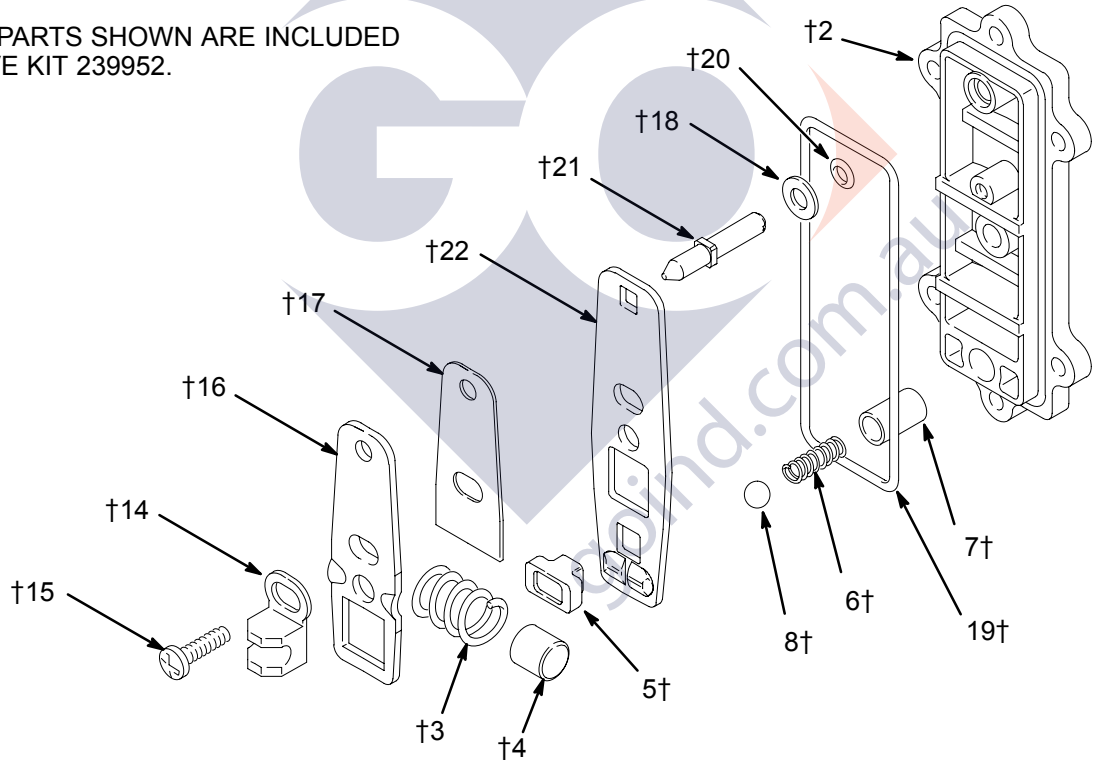

Fig. 11

Reassembly

1. *If the detent collar (7) was removed,* carefully install a new collar in a new cover (2), using a rubber mallet. See Fig. 12.

2. Grease the spring (6) and place it in the collar (7). Grease the ball (8) and set it on the spring.

3. Grease the o-ring (20) and install it in the hole (H) in the cover (2). See Fig. 12. Slide the washer (18) onto the blunt end of the reset shaft (21). Insert the shaft through the cover (2) until it seats.

4. Grease the spring (3). Place the link stop (4) inside the spring.

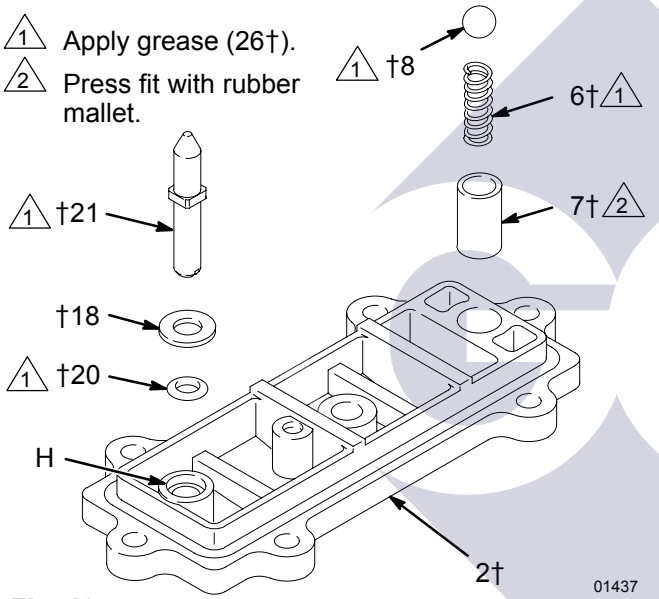

Fig. 12

5. Grease the detent link (22) and link spacer (17). Assemble the detent link, link spacer, and actuator link (16) as shown in Fig. 13. The raised bumps on the links (22 and 16) must face up.

6. Squeeze the spring (3) and install it and the stop (4) in the link assembly. The spring tension will hold all these parts together. Grease the valve cup (5) and install it in the link assembly as shown.

7. Install the link assembly on the cover (2) so the pointed end of the reset shaft (21) fits through the holes in the links and the square part of the shaft engages the square hole. Make certain the bumps on the detent link (22) engage the ball (8).

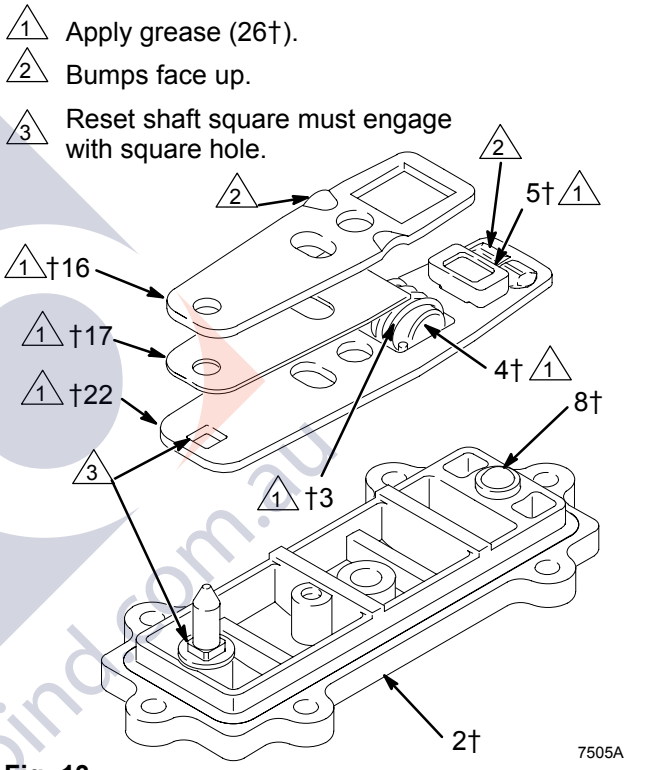

Fig. 13

goindcom.au

8. Grease the inside surfaces of the shift saddle (14) and install it as shown in Fig. 14. Hold the link assembly firmly in place and install the screw (15). Torque to 7 to 9 in-lb (0.8 to 1.0 N-m). Install the o-ring (19) on the cover (2).

9. Reinstall the air valve as explained on page 16.

1 Apply grease (26†).

2 Torque to 7 to 9 in-lb (0.8 to 1.0 N-m).

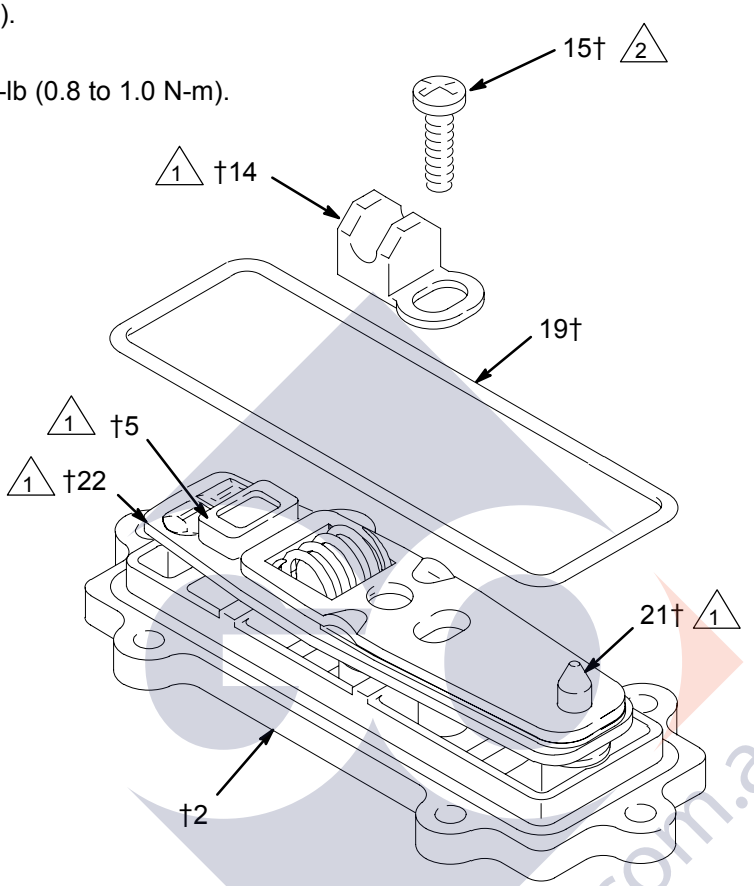

Fig. 14

goind.com.au

⚠ CAUTION

Do not over-torque the manifold bolts (104). Doing so may cause the nuts (106) to spin in the housings, damaging the cover (101).

Ball Check Valves

Tools Required

- Torque wrench
- 1/2” (13 mm) socket wrench
- O-ring pick

NOTE: A Fluid Section Repair Kit is available. See page 27 for the correct kit. Parts included in the kit are marked with an asterisk, for example (301*). Use all the parts in the kit for the best results. Always replace the o-rings (108) with new ones whenever the old ones are removed.

⚠ WARNING

To reduce the risk of serious injury whenever you are instructed to relieve pressure, always follow the **Pressure Relief Procedure** on page 11.

1. **Relieve the pressure.** Disconnect all hoses. Remove the pump from its mounting.
2. Using a 1/2” socket wrench, remove the nuts (106) holding the top manifold (102) to the covers (101). Lift the manifold off the pump. See Fig. 15.
3. Remove the outer o-ring (108), ball guide (202), ball (301), seat (201), and inner o-ring (108) from each of the covers.
4. Turn the pump over. Pull the tie rods (104) out of the pump, leaving the four nuts (106) on the rods. Remove the feet (107) and lower manifold (102).
5. Remove the outer o-ring (108), seat (201), ball (301), ball guide (202), and inner o-ring (108) from each of the covers (101).
6. Clean all parts and inspect for wear or damage. Replace parts as needed.
7. Reassemble the intake ball checks in the bottom of the pump, following all notes in Fig. 15. Be sure the ball checks are assembled **exactly** as shown.
8. Set the lower manifold (102) and feet (107) in place on the bottom of the pump.
9. Insert the long threads of each rod (104) through the feet and lower manifold. Push the rods up through the covers (101) until the nut (106) on the end of the rods bottoms on the foot. Make sure the rods are pushed all the way through. Turn the pump upright (the rods are a slight interference fit and will hold the pump parts securely in place).
10. Reassemble the outlet ball checks in the top of the pump, following all notes in Fig. 15. Be sure the ball checks are assembled **exactly** as shown. To avoid leaks, run your finger over the o-rings (108) to ensure that they are properly seated.
11. Install the top manifold (102) and four nuts (106). Torque to 50 to 60 in-lb (5.6 to 6.8 N-m). See **Torque Sequence**, page 32. ***Do not over-torque.***

goind.com.au

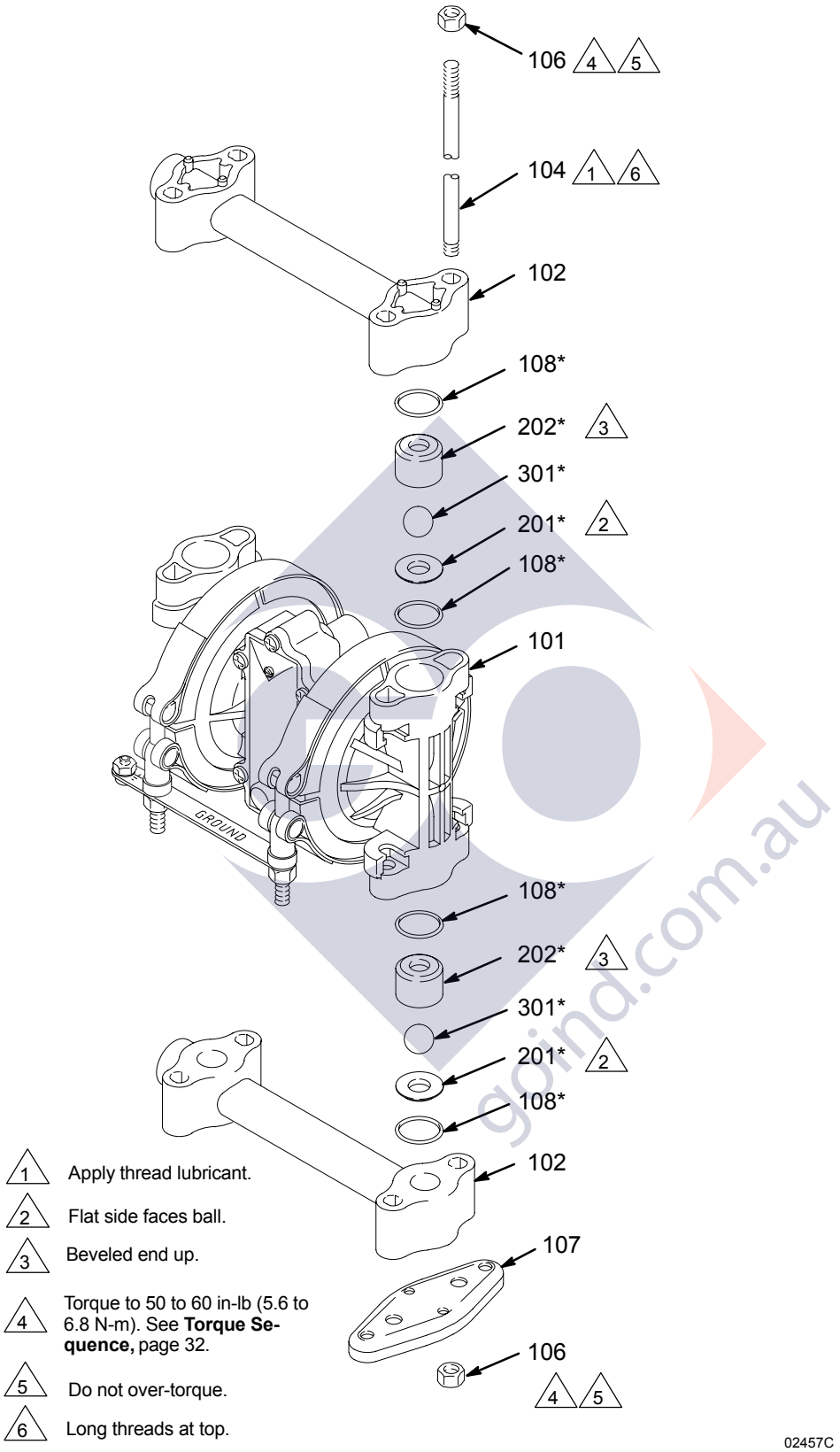
106 4 5
104 1 6
102
108*
202* 3
301*
201* 2
108*
101
GROUND
108*
202* 3
301*
201* 2
108*
102
107
106
4 5
1 Apply thread lubricant.
2 Flat side faces ball.
3 Beveled end up.
4 Torque to 50 to 60 in-lb (5.6 to 6.8 N-m). See **Torque Sequence,** page 32.
5 Do not over-torque.
6 Long threads at top.
02457C

Fig. 15

Diaphragm Repair

Tools Required

- Torque wrench
- One 7/16” (11 mm) and two 1/2” (13 mm) socket wrenches
- Phillips screwdriver
- O-ring pick
- 13/32” EZY-OUT bearing extractor
- Rubber mallet
- Vise with soft jaws

Disassembly

NOTE: A Fluid Section Repair Kit is available. See page 27 for the correct kit. Parts included in the kit are marked with an asterisk, for example (401*). Use all the parts in the kit for the best results.

⚠ WARNING

To reduce the risk of serious injury whenever you are instructed to relieve pressure, always follow the **Pressure Relief Procedure** on page 11.

1. **Relieve the pressure.** Disconnect all hoses.
2. Remove the air valve from the pump (see page 16).
3. Remove the manifolds (102) and disassemble the ball check valves as explained on page 21. Always replace the o-rings (108) with new ones.
4. Using a 7/16” socket wrench, remove the clamp nuts (113) and the grounding strip (112). Loosen the clamps (111) and slip them over the housing (1). Pull the covers (101) off the pump, then remove the clamps from the housing. See the Detail in Fig. 16.
5. Using a 1/2” socket wrench on both outer diaphragm plates (103), unscrew one plate from the diaphragm shaft (23). Remove one diaphragm (401), inner diaphragm plate (118), and o-ring (404). Pull the opposite diaphragm assembly and the diaphragm shaft out of the pump housing (1). See Fig. 16. Clamp the shaft in a vise with soft jaws and unscrew the outer plate (103), then disassemble the remaining diaphragm assembly.
6. Inspect the diaphragm shaft (23‡) for wear or scratches. If it is damaged, check the bearings (31‡) also. Replace parts as needed. To remove the bearings, place a 13/32 EZY-OUT in a vise. Position the pump housing (1) over the EZY-OUT (see Fig. 16). Turn the housing in the direction shown by the arrows to remove the bearing.
7. Hook the shaft seals (30‡) with an o-ring pick and pull them out of the housing (1).
8. Clean all parts and inspect for wear or damage. Replace parts as needed.

goind.com.au

Reassembly

1. Install the shaft seals (30‡) in the housing (1). Using a rubber mallet, carefully drive the bearings (31‡) flush into the housing so the holes face out. See Fig. 16.

2. Grease the diaphragm shaft (23‡) and slide it into the housing (1). Install the o-rings (404*) in the grooves of the housing.

3. Assemble the inner diaphragm plates (118), diaphragms (401*), and outer diaphragm plates (103) as shown in Fig. 16. Apply medium-strength (blue) Loctite® or equivalent to the threads of the fluid-side plates (103), and torque the plates to 75 to 85 in-lb (8.5 to 9.6 N•m) at 100 rpm maximum using a 1/2-in. socket wrench. ***Do not over-torque.*** These parts ***must*** be assembled correctly.

⚠ CAUTION

Do not over-torque the outer diaphragm plates (103). Doing so will damage the hex heads.

4. When installing the covers (101), slip the clamps (111) over the housing (1) before positioning the covers. See the Detail in Fig. 16. Engage the notches in the covers with the locator tabs on the housing, then position the clamps over both parts. The clamp bolts should be on the air valve side of the housing, and pointing down toward the bottom of the pump. Install the grounding strip on the bolts. Apply thread lubricant to the bolts, then install the clamp nuts (113). Using a 7/16” socket wrench, torque the nuts to 50 to 60 in-lb (5.6 to 6.8 N•m). See **Torque Sequence**, page 32.

5. Reassemble the ball check valves and manifolds as explained on page 21. Always install new o-rings (108*), and make sure they are properly seated.

6. Reinstall the air valve, using the six mounting screws (15). See Fig. 10.

goind.com.au

Service

1 Grease shaft.
2 Apply thread lubricant.
3 Flat side faces ball.
4 Beveled end up.
6 Round side must face toward diaphragm.
7 Apply medium-strength (blue) Loctite® or equivalent. Torque to 75 to 85 in-lb (8.5 to 9.6 N-m) at 100 rpm maximum using a 1/2-in. socket wrench.
8 Torque to 50 to 60 in-lb (5.6 to 6.8 N-m). See **Torque Sequence**, page 32.
9 Do not over-torque.
10 Notches must engage tabs.

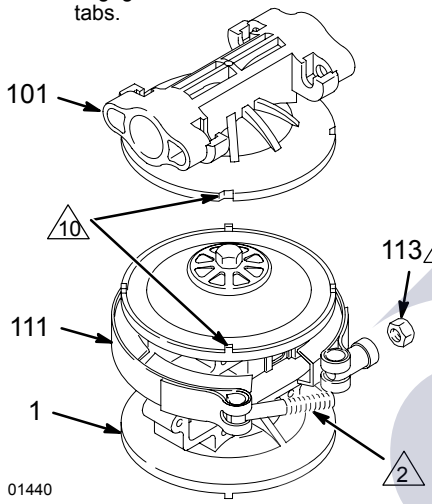

DETAIL OF CLAMPS AND COVERS

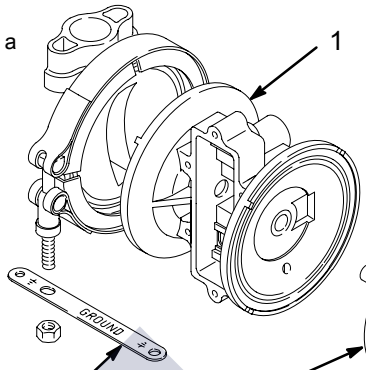

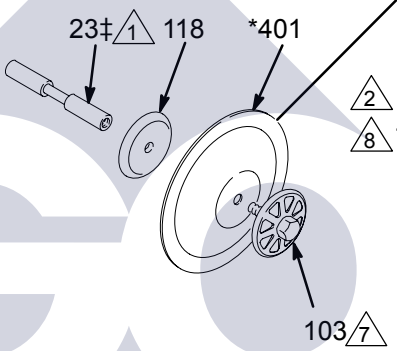

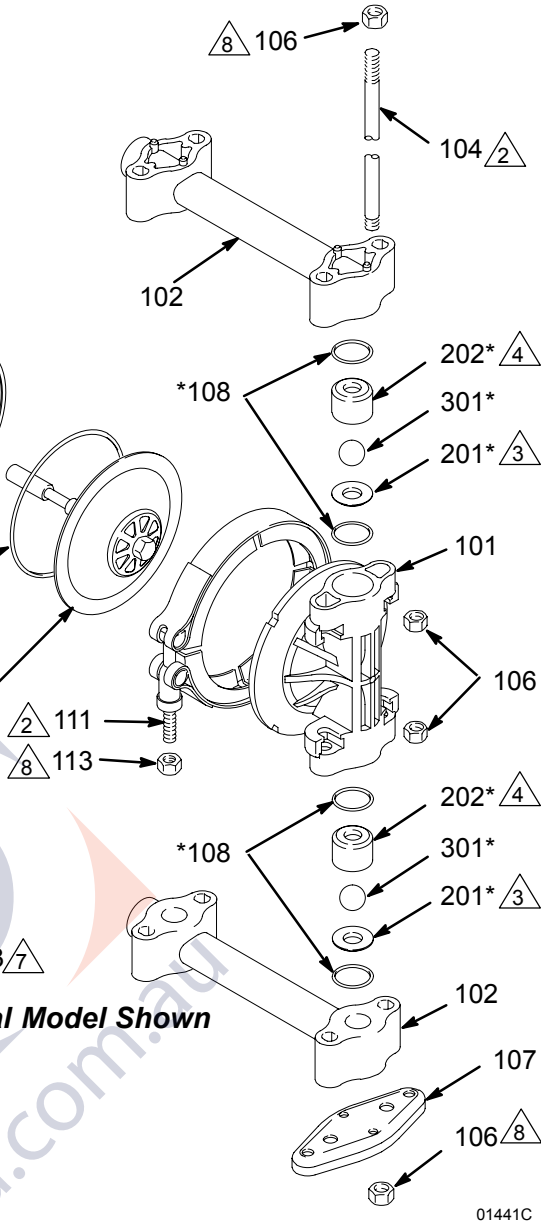

Acetal Model Shown

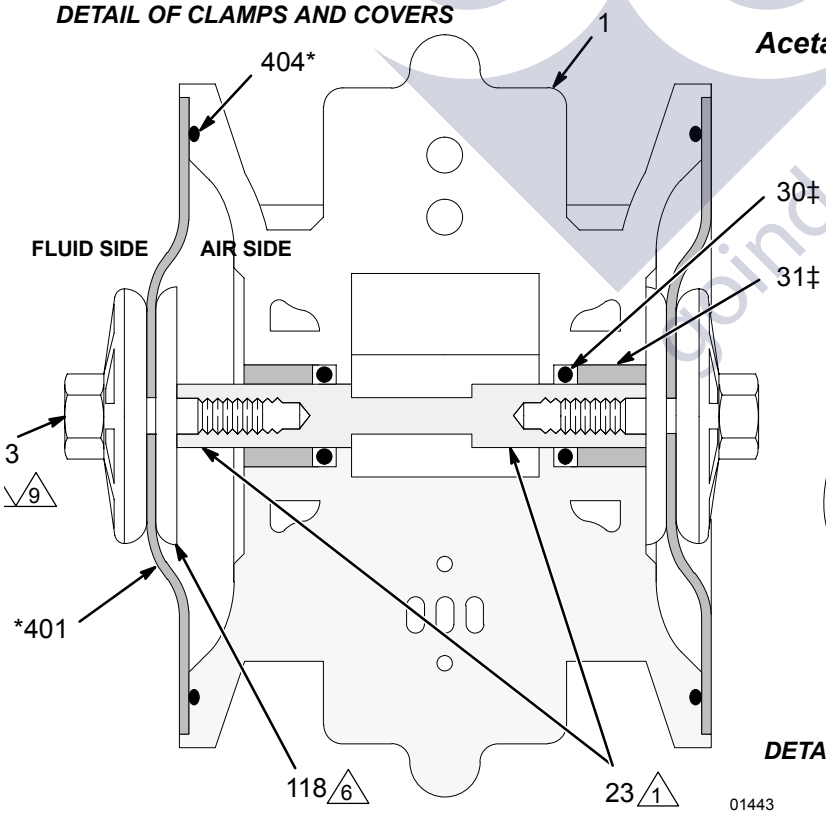

CUTAWAY VIEW OF DIAPHRAGM ASSEMBLIES IN PUMP HOUSING

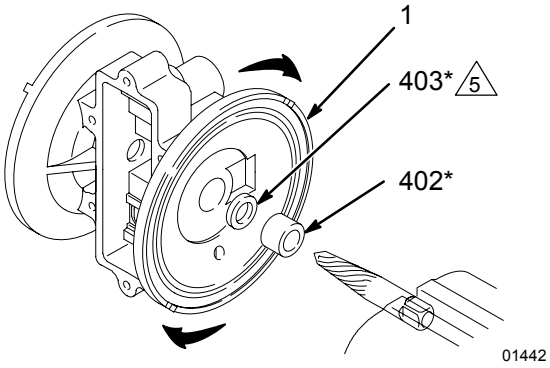

13/32 IN. EZY-OUT

DETAIL OF BEARING REMOVAL USING EZY-OUT

gpind.com.au

Pump Matrix

Husky 307 Acetal and Polypropylene Pumps, Series F

Your Model No. is marked on the pump's serial plate. To determine the Model No. of your pump from the following matrix, select the six digits which describe your pump, working from left to right. The first digit is always **D**, designating Husky diaphragm pumps. The remaining five digits define the materials of construction. For example, a pump with a polypropylene air motor, acetal fluid section, acetal seats, PTFE balls, and PTFE diaphragms is Model **D 3 1 2 1 1.** To order replacement parts, refer to the part lists on pages 28 to 29. *The digits in the matrix **do not** correspond to the ref. nos. in the parts drawing and lists.*

Diaphragm Pump	**Air Motor**	Fluid Section	–	**Seats**	**Balls**	**Diaphragms**
D (for all pumps)	3 (polypropylene)	1 (acetal)	–	1 (not used)	1 (PTFE)	1 (PTFE)
		2 (polypropylene)	–	2 (acetal)	2 (not used)	2 (not used)
		A (acetal BSPT)	–	3 (316 sst)	3 (316 sst)	3 (not used)
		B (polypropylene BSPT)	–	4 (not used)	4 (not used)	4 (not used)
			–	5 (not used)	5 (TPE)	5 (TPE)
			–	6 (not used)	6 (Santoprene®)	6 (Santoprene®)
			–	7 (not used)	7 (buna-N)	7 (buna-N)
			–	8 (not used)	8 (not used)	8 (not used)
			–	9 (polypropylene)	9 (not used)	9 (not used)

Husky 307 Acetal and Polypropylene Pumps, Series F continued

Model 248167

Same as D31277 except with split inlets/outlets.

Model 248168

Same as D31255 except with split inlets/outlets.

Model 248169

Same as D32255 except with split inlets/outlets.

Model 248170

Same as D32977 except with split inlets/outlets.

goind.com.au

Repair Kit Matrix

For Husky 307 Acetal and Polypropylene Pumps, Series F

Repair Kits may be ordered separately. To repair the air valve, order **Part No. 239952** (see page 28). Parts included in the Air Valve Repair Kit are marked with a symbol in the parts list, for example (2†).

To repair your pump, select the six digits which describe your pump from the following matrix, working from left to right. The first digit is always **D**, the second digit is always **0** (zero), and the third is always **3**. The remaining three digits define the materials of construction. Parts included in the kit are marked with an asterisk in the parts list, for example (201*). For example, if your pump has acetal seats, PTFE balls, and PTFE diaphragms, order Repair Kit **D 0 3 2 1 1.** If you only need to repair certain parts (for example, the diaphragms), use the 0 (null) digits for the seats and balls, and order Repair Kit **D 0 3 0 0 1.** *The digits in the matrix **do not** correspond to the ref. nos. in the parts drawing and lists on pages 28 to 29.*

Diaphragm Pump	Null	O-rings	–	Seats	Balls	Diaphragms
D (for all pumps)	0 (for all pumps)	3 (PTFE)	–	0 (null)	0 (null)	0 (null)
			–	1 (not used)	1 (PTFE)	1 (PTFE)
			–	2 (acetal)	2 (not used)	2 (not used)
			–	3 (316 sst)	3 (316 sst)	3 (not used)
			–	4 (not used)	4 (not used)	4 (not used)
			–	5 (not used)	5 (TPE)	5 (TPE)
			–	6 (not used)	6 (Santoprene®)	6 (Santoprene®)
			–	7 (not used)	7 (buna-N)	7 (buna-N)
			–	8 (not used)	8 (not used)	8 (not used)
			–	9 (polypropylene)	9 (not used)	9 (not used)

goind.com.au

Parts

Air Motor Parts List (Matrix Column 2)

Digit	Ref. No.	Part No.	Description	Qty
3	1	187705	HOUSING, center; polypropylene; see page 29	1
	2†	187706	COVER, air valve; polypropylene	1
	3†	187722	SPRING, compression; sst	1
	4†	187853	STOP, link; acetal	1
	5†	192675	CUP, valve; acetal	1
	6†	187728	SPRING, compression; sst	1
	7†	187730	COLLAR, detent; sst	1
	8†	111629	BALL, detent; carbide	1
	9†	187726	BEARING, link; acetal; see page 29	1
	10	111631	SCREW, thread-forming; 1/4–20; 0.375 in. (9.5 mm) long; see page 29	2
	11	112933	MUFFLER; see page 29	1
	12	187719	SEAL, plate, valve; buna-N; see page 29	1
	13	187720	PLATE, valve; sst; see page 29	1
	14†	187718	SADDLE, shift; acetal	1
	15†	111630	SCREW, thread-forming; 10–14 size; 0.75 in. (19 mm) long; see below and page 29	7

Digit	Ref. No.	Part No.	Description	Qty
	16†	187724	LINK, actuator; sst	1
	17†	188175	SPACER, link; acetal	1
	18†	111750	WASHER, plain; sst	1
	19†	111624	O-RING; buna-N	1
	20†	111625	O-RING; buna-N	1
	21†	187727	SHAFT, reset; sst	1
	22†	192526	LINK, detent; sst	1
	23‡	191781	SHAFT, diaphragm; sst; see page 29	1
	26†	111920	GREASE, general purpose; 0.375 oz. (10.5 g); not shown	1
	27†	100179	NUT, hex; 10–24; see page 29	1
	28†	102790	SCREW; 10–24; 0.75 in. (19 mm) long; see page 29	1
	29†	100718	LOCKWASHER, int. tooth; no. 10; see page 29	1
	30‡	113704	PACKING, u-cup; fluoroelastomer	2
	31‡	191779	BEARING; acetal	2

† *These parts are included in Air Valve Kit 239952, which may be purchased separately. The kit includes only one screw (15), shown below, and a tube of grease (26).*

‡ *These parts are included in Diaphragm Shaft Kit 239014, which may be purchased separately.*

† *Not supplied with Polypropylene pump.*

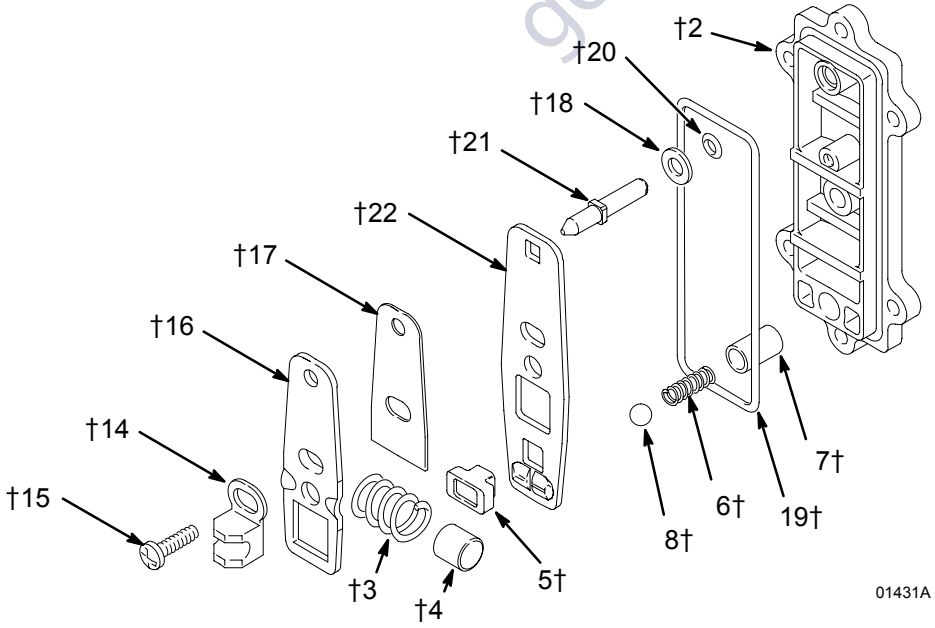

Parts

Acetal Model Shown

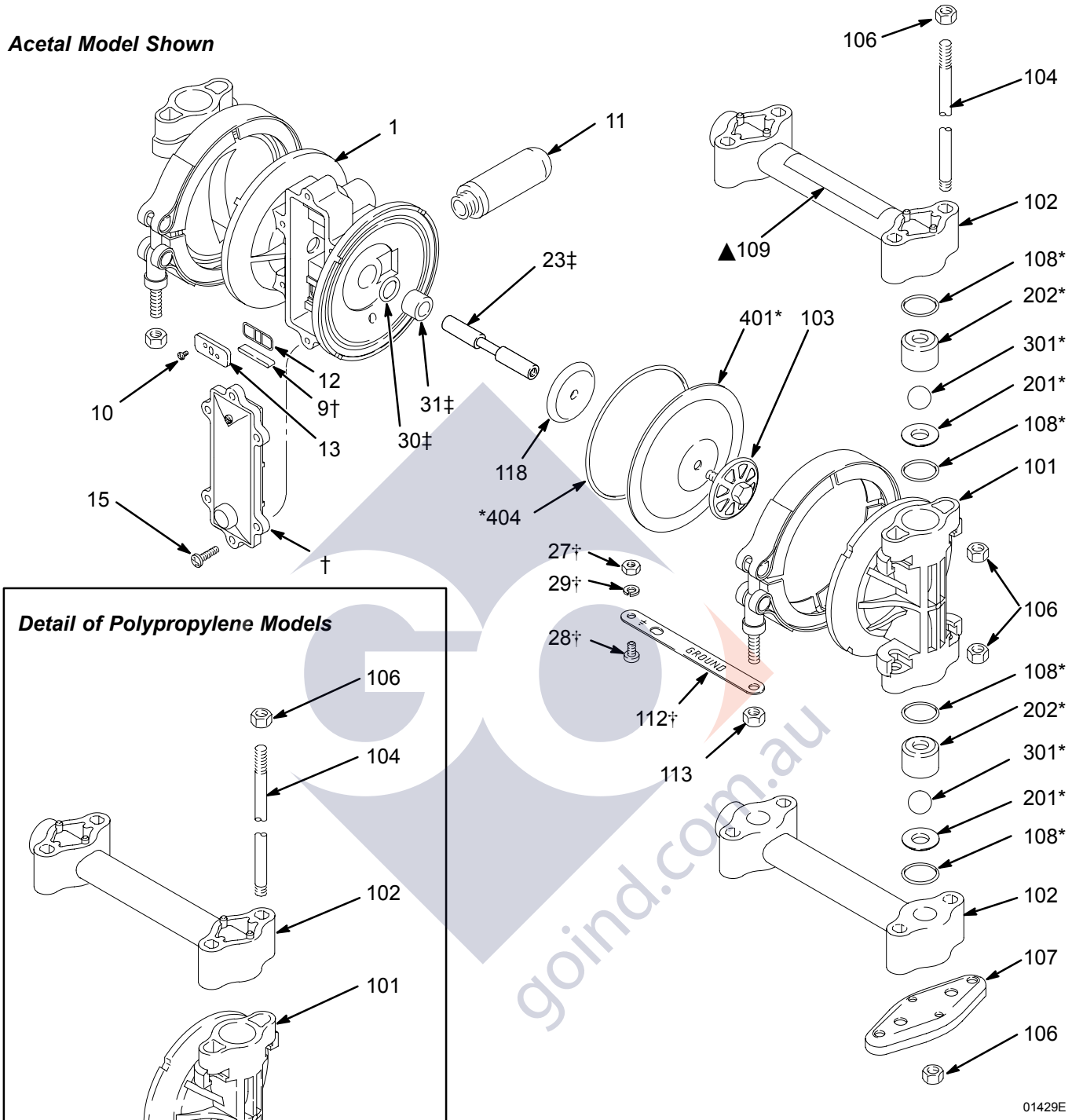

Detail of Polypropylene Models

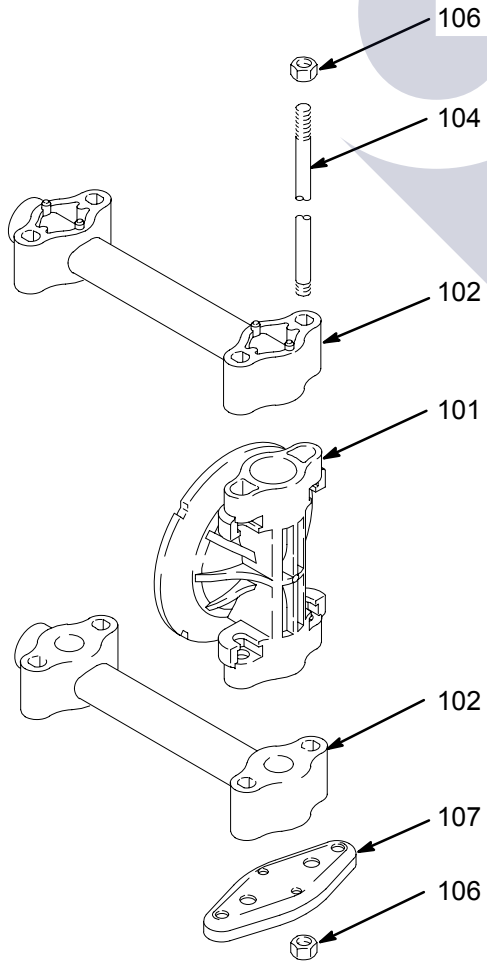

* *Included in Pump Repair Kit, which may be purchased separately. See page 27.*

† *Included in Air Valve Kit 239952, which may be purchased separately. See parts list on page 28.*

▲ *Replacement Danger and Warning labels, tags and cards are available at no cost.*

‡ *Included in Diaphragm Shaft Kit 239014, which may be purchased separately.*

† *Not supplied with Polypropylene pump.*

goind.com.au

Parts

Fluid Section Parts List (Matrix Column 3)

Digit	Ref. No.	Part No.	Description	Qty
1	101	187701	COVER, fluid; acetal with conductive sst fibers	2
	102	235337	MANIFOLD; acetal with conductive sst fibers	2
	103	187711	PLATE, fluid side; acetal	2
	104	188999	ROD, tie; 5/16–18	4
	106	117233	NUT; 5/16–18	8
	107	187721	FEET	2
	108	111603	O-RING; PTFE	8
	109 ▲	187732	LABEL, warning	1
	111	187820	CLAMP	2
	112	191079	STRIP, grounding	1
	113	112499	NUT, clamp; 1/4–28	2
	118	191741	PLATE, air side; sst	2
2	101	187702	COVER, fluid; polypropylene	2
	102	235338	MANIFOLD; polypropylene	2
	103	187712	PLATE, fluid side; polypropylene	2
	104	188999	ROD, tie; 5/16–18	4
	106	117233	NUT; 5/16–18	8
	107	187721	FEET	2
	108	111603	O-RING; PTFE	8
	109 ▲	187732	LABEL, warning	1
	111	187820	CLAMP	2
	113	112499	NUT, clamp; 1/4–28	2
	118	191741	PLATE, air side; sst	2

Digit	Ref. No.	Part No.	Description	Qty
A	101	187701	COVER, fluid; acetal with conductive sst fibers	2
	102	239146	MANIFOLD; acetal with conductive sst fibers; BSPT	2
	103	187711	PLATE, fluid side; acetal	2
	104	188999	ROD, tie; 5/16–18	4
	106	117233	NUT; 5/16–18	8
	107	187721	FEET	2
	108	111603	O-RING; PTFE	8
	109 ▲	187732	LABEL, warning	1
	111	187820	CLAMP	2
	112	191079	STRIP, grounding	1
	113	112499	NUT, clamp; 1/4–28	2
	118	191741	PLATE, air side; sst	2
B	101	187702	COVER, fluid; polypropylene	2
	102	239147	MANIFOLD; polypropylene; BSPT	2
	103	187712	PLATE, fluid side; polypropylene	2
	104	188999	ROD, tie; 5/16–18	4
	106	117233	NUT; 5/16–18	8
	107	187721	FEET	2
	108	111603	O-RING; PTFE	8
	109 ▲	187732	LABEL, warning	1
	111	187820	CLAMP	2
	113	112499	NUT, clamp; 1/4–28	2

gainc.com.au

Parts

Seat Parts List (Matrix Column 4)

Digit	Ref. No.	Part No.	Description	Qty
2	201*	187709	SEAT; acetal	4
	202*	187707	GUIDE; acetal	4
3	201*	190245	SEAT; 316 stainless steel	4
	202*	187707	GUIDE; acetal	4
9	201*	187710	SEAT; polypropylene	4
	202*	187708	GUIDE; polypropylene	4

Ball Parts List (Matrix Column 5)

Digit	Ref. No.	Part No.	Description	Qty
1	301*	111626	BALL; PTFE	4
3	301*	112926	BALL; 316 stainless steel	4
5	301*	111627	BALL; TPE	4
6	301*	113221	BALL; Santoprene®	4
7	301*	112884	BALL; buna-N	4

Diaphragm Parts List (Matrix Column 6)

Digit	Ref. No.	Part No.	Description	Qty
1	401*	187716	DIAPHRAGM; PTFE	2
	404*	166071	O-RING; buna-N	2
5	401*	187715	DIAPHRAGM; TPE	2
	404*	166071	O-RING; buna-N	2
6	401*	190754	DIAPHRAGM; Santoprene®	2
	404*	166071	O-RING; buna-N	2
7	401*	190209	DIAPHRAGM; buna-N	2
	404*	166071	O-RING; buna-N	2

goind.com.au

Torque Sequence

Always follow torque sequence when instructed to torque fasteners.

1. Left/Right Fluid Covers
   Torque bolts to 50–60 in–lb (5.6–6.8 N•m)

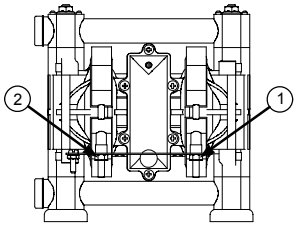

FRONT VIEW

3. Inlet Manifold
   Torque bolts to 50–60 in–lb (5.6–6.8 N•m)

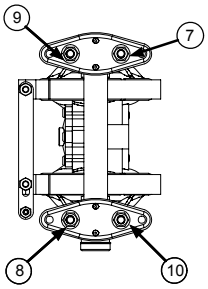

BOTTOM VIEW

2. Outlet Manifold
   Torque bolts to 50–60 in–lb (5.6–6.8 N•m)

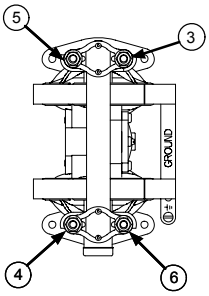

TOP VIEW

goind.com.au

Technical Data

Pumps with PTFE Diaphragms

Maximum fluid working pressure . . . 100 psi (0.7 MPa, 7 bar)
Air pressure operating range . . . . . 20 to 100 psi (0.14 to 0.7 MPa, 1.4 to 7 bar)
Maximum air consumption . . . . . 5.5 SCFM (see chart)
Maximum free flow delivery . . . . . 6.5 gpm (24.6 l/min)
Maximum pump speed . . . . . 330 cpm
Maximum suction lift . . . . . 7 ft (2.1 m) dry; 12 ft (3.7 m) wet
Maximum size pumpable solids . . . . . 1/16 in. (1.6 mm)
Sound power level,
at full flow: (100 psi [0.7 MPa, 7 bar) . . . . . 85 dBa
Sound power level,
at 70 psi (0.48 MPa, 4.8 bar) and 1 gpm (3.8 lpm) . 78 dBa
Operating temperature range . . . . . 40 to 150° F (4.4 to 65.5° C)

Air inlet size . . . . . 1/4 npt(f)
Fluid inlet and outlet size. . . . . 3/8 npt(f)
Wetted parts . . . . . Vary by model. See pages 28 and 30. Acetal models include acetal with conductive sst fibers.
Non-wetted external parts . . . . . acetal, polyester (labels), glass-filled polypropylene with conductive SST fibers, 303, 304 and 316 stainless steel
Weight . . . . . *Acetal Pumps:* 5.25 lb (2.4 kg)
Polypropylene Pumps: 4.75 lb (2.2 kg)

* Sound power level measured per ISO standard 9614–2.

Loctite® is a registered trademark of the Loctite Corporation.

Santoprene® is a registered trademark of the Monsanto Company.

Example of Finding Pump Air Consumption and Air Pressure at a Specific Fluid Delivery and Discharge Head: To supply 3 gpm (11.4 liters) fluid flow (horizontal scale) at 50 psi (3.5 bar) discharge head pressure (vertical scale) requires 3 scfm (.084 m3/min) air consumption at 70 psi (4.9 bar) inlet air pressure.

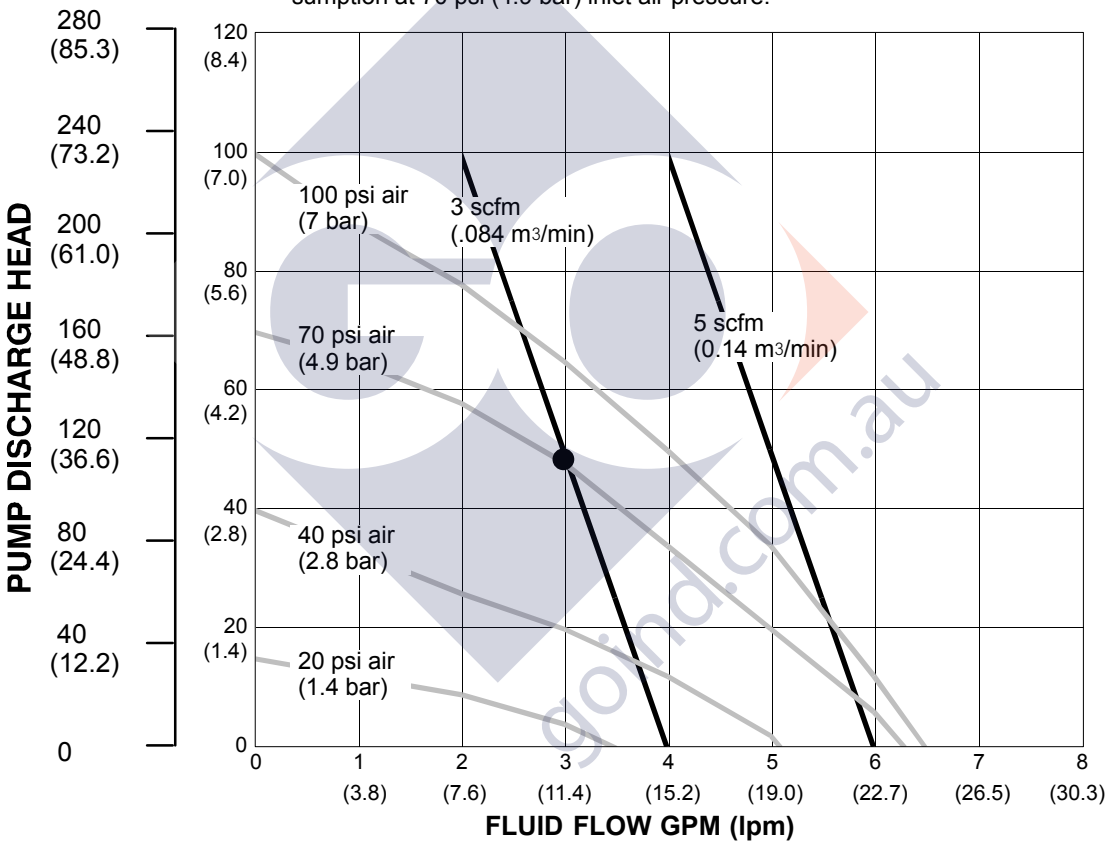

TEST CONDITIONS
Pump tested in water with inlet submerged.

KEY FLUID PRESSURE AND FLOW
SCFM AIR CONSUMPTION

PUMPING RATE DECREASE AT DIFFERENT SUCTION LIFTS

EXAMPLE: At a suction lift of 10 ft (3.05 m), the pump flow rate will be decreased by 20 percent.

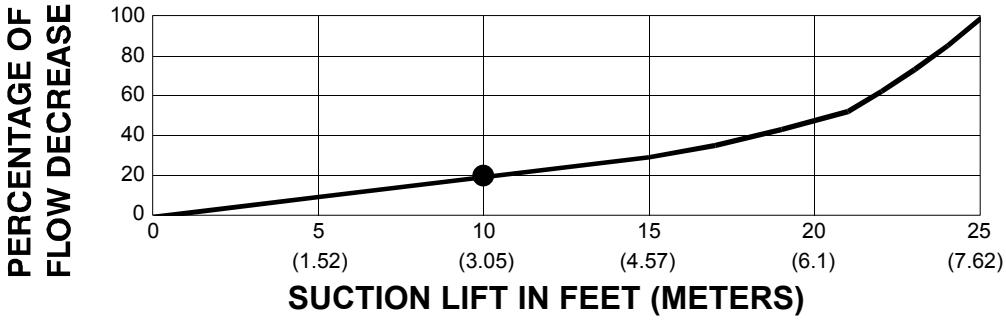

Technical Data

Pumps with TPE or Buna-N Diaphragms

Maximum fluid working pressure . . . 100 psi (0.7 MPa, 7 bar)
Air pressure operating range . . . . . 20 to 100 psi (0.14 to 0.7 MPa, 1.4 to 7 bar)
Maximum air consumption . . . . . 5.5 SCFM (see chart)
Maximum free flow delivery . . . . . 7 gpm (26.5 l/min)
Maximum pump speed . . . . . 330 cpm
Maximum suction lift . . . . . 12 ft (3.7 m) dry; 21 ft (6.4 m) wet
Maximum size pumpable solids . . . . . 1/16 in. (1.6 mm)
Sound power level,
at full flow: (100 psi [0.7 MPa, 7 bar) . . . . . 85 dBa
Sound power level,
at 70 psi (0.48 MPa, 4.8 bar) and 1 gpm (3.8 lpm) . 78 dBa
Operating temperature range . . . . . 40 to 150° F (4.4 to 65.5° C)

Air inlet size . . . . . 1/4 npt(f)
Fluid inlet and outlet size. . . . . 3/8 npt(f)
Wetted Parts . . . . . Vary by model. See pages 28 and 30. Acetal models include acetal with conductive sst fibers.
Non-wetted external parts . . . . . acetal, polyester (labels), glass-filled polypropylene with conductive SST fibers, 303, 304 and 316 stainless steel
Weight . . . . . *Acetal Pumps:* 5.25 lb (2.4 kg)
Polypropylene Pumps: 4.75 lb (2.2 kg)

* Sound power level measured per ISO standard 9614–2.

Loctite® is a registered trademark of the Loctite Corporation.

Santoprene® is a registered trademark of the Monsanto Company.

Example of Finding Pump Air Consumption and Air Pressure at a Specific Fluid Delivery and Discharge Head: To supply 3 gpm (11.4 liters) fluid flow (horizontal scale) at 50 psi (3.5 bar) discharge head pressure (vertical scale) requires 3 scfm (.084 m3/min) air consumption at 70 psi (4.9 bar) inlet air pressure.

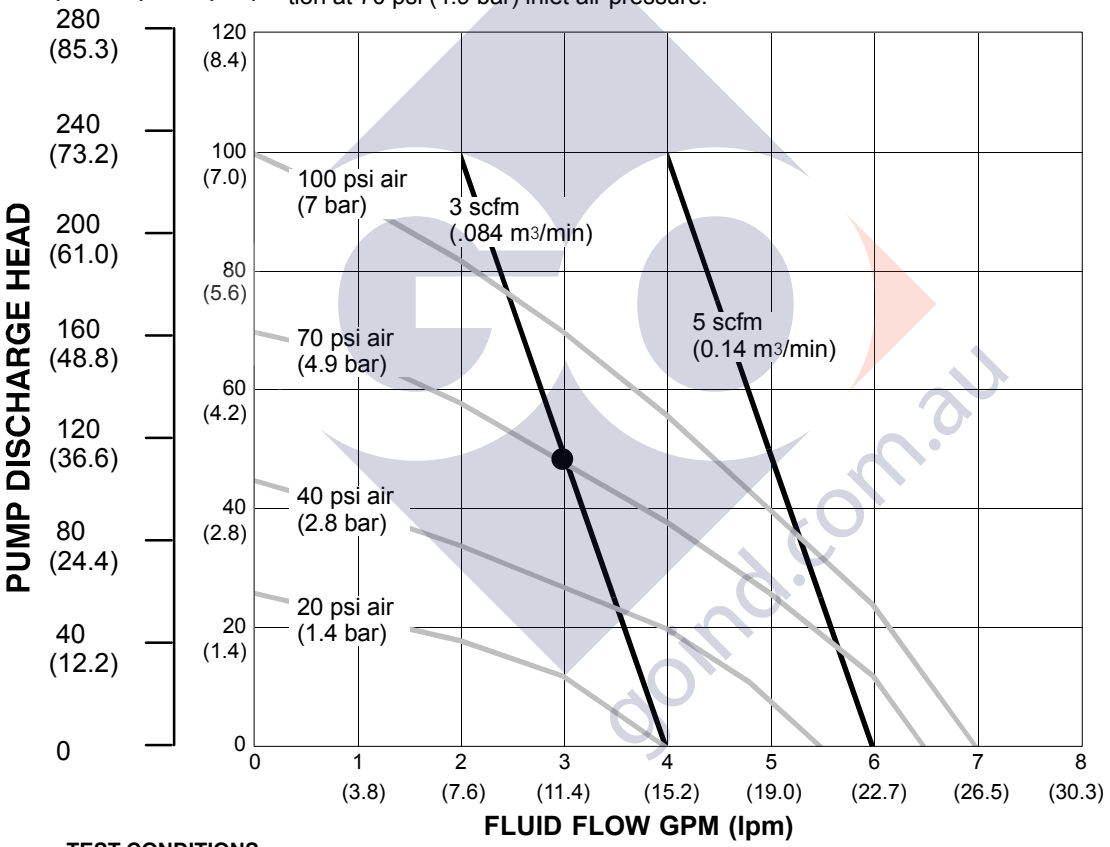

TEST CONDITIONS
Pump tested in water with inlet submerged.

KEY
FLUID PRESSURE AND FLOW
SCFM AIR CONSUMPTION

PUMPING RATE DECREASE AT DIFFERENT SUCTION LIFTS

EXAMPLE: At a suction lift of 10 ft (3.05 m), the pump flow rate will be decreased by 20 percent.

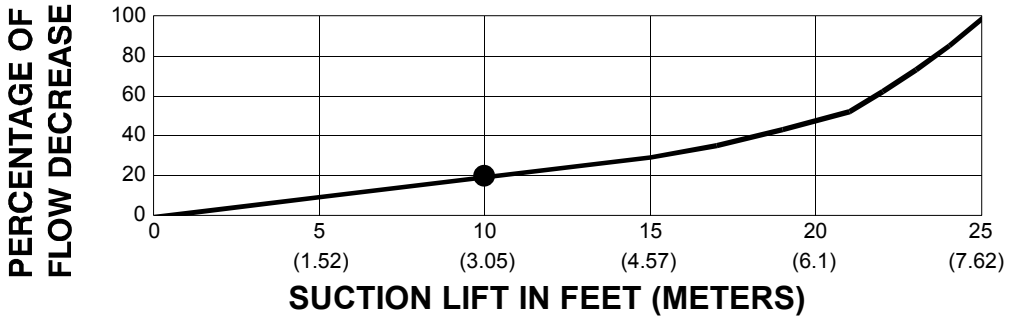

Dimensions

FRONT VIEW

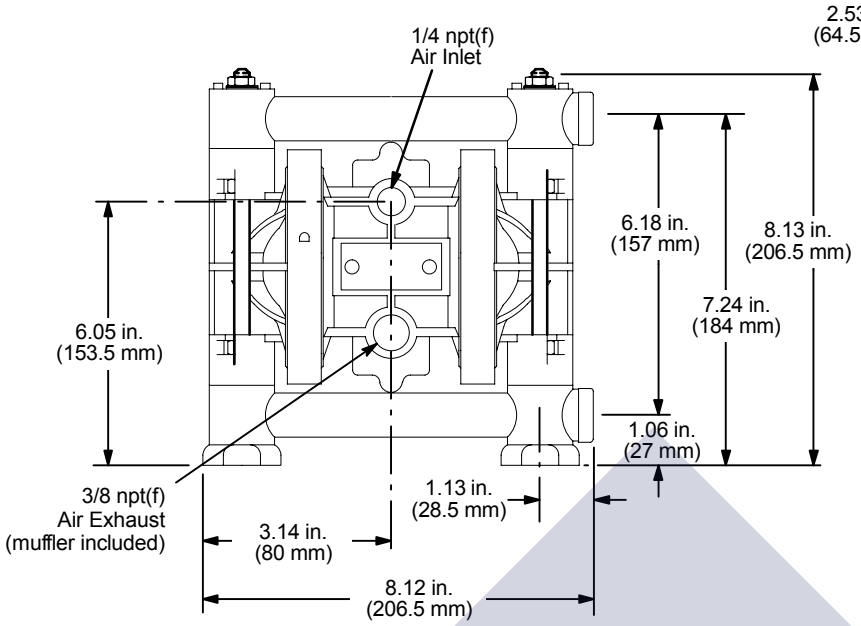

SIDE VIEW

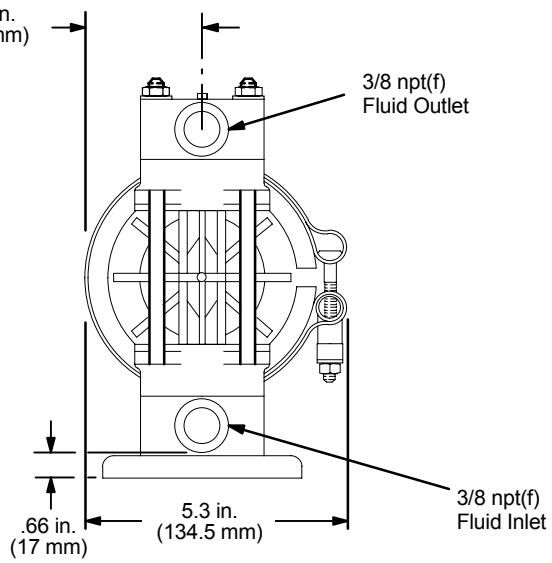

WALL BRACKET 224-835

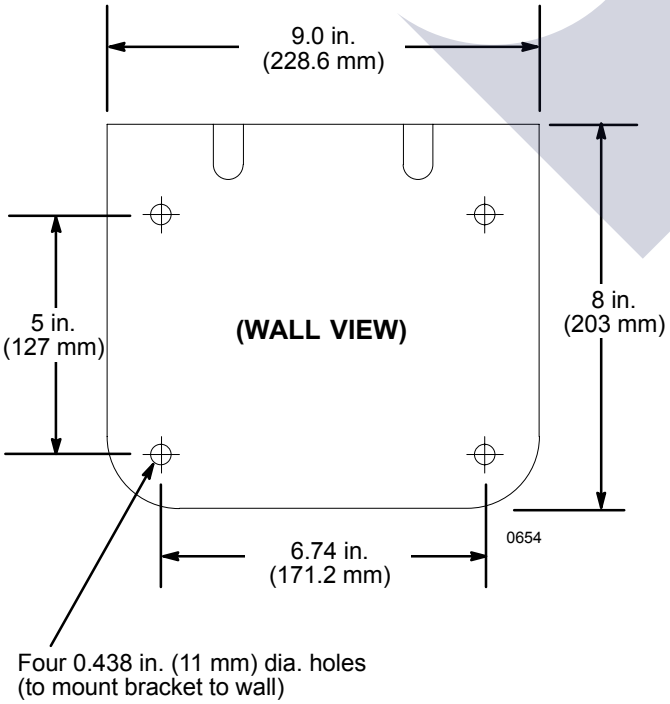

PUMP MOUNTING HOLE PATTERN

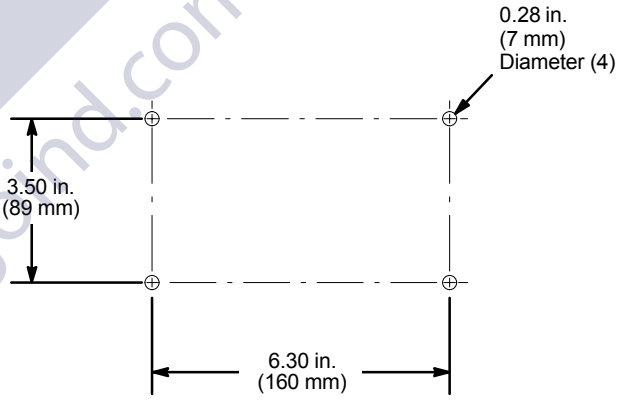

07316B

gcind.com.au

Graco Standard Husky Pump Warranty

Graco warrants all equipment referenced in this document which is manufactured by Graco and bearing its name to be free from defects in material and workmanship on the date of sale to the original purchaser for use. With the exception of any special, extended, or limited warranty published by Graco, Graco will, for a period of five years from the date of sale, repair or replace any part of the equipment determined by Graco to be defective. This warranty applies only when the equipment is installed, operated and maintained in accordance with Graco's written recommendations.

This warranty does not cover, and Graco shall not be liable for general wear and tear, or any malfunction, damage or wear caused by faulty installation, misapplication, abrasion, corrosion, inadequate or improper maintenance, negligence, accident, tampering, or substitution of non–Graco component parts. Nor shall Graco be liable for malfunction, damage or wear caused by the incompatibility of Graco equipment with structures, accessories, equipment or materials not supplied by Graco, or the improper design, manufacture, installation, operation or maintenance of structures, accessories, equipment or materials not supplied by Graco.

This warranty is conditioned upon the prepaid return of the equipment claimed to be defective to an authorized Graco distributor for verification of the claimed defect. If the claimed defect is verified, Graco will repair or replace free of charge any defective parts. The equipment will be returned to the original purchaser transportation prepaid. If inspection of the equipment does not disclose any defect in material or workmanship, repairs will be made at a reasonable charge, which charges may include the costs of parts, labor, and transportation.

THIS WARRANTY IS EXCLUSIVE, AND IS IN LIEU OF ANY OTHER WARRANTIES, EXPRESS OR IMPLIED, INCLUDING BUT NOT LIMITED TO WARRANTY OF MERCHANTABILITY OR WARRANTY OF FITNESS FOR A PARTICULAR PURPOSE.

Graco's sole obligation and buyer's sole remedy for any breach of warranty shall be as set forth above. The buyer agrees that no other remedy (including, but not limited to, incidental or consequential damages for lost profits, lost sales, injury to person or property, or any other incidental or consequential loss) shall be available. Any action for breach of warranty must be brought within six (6) years of the date of sale.

GRACO MAKES NO WARRANTY, AND DISCLAIMS ALL IMPLIED WARRANTIES OF MERCHANTABILITY AND FITNESS FOR A PARTICULAR PURPOSE, IN CONNECTION WITH ACCESSORIES, EQUIPMENT, MATERIALS OR COMPONENTS SOLD BUT NOT MANUFACTURED BY GRACO. These items sold, but not manufactured by Graco (such as electric motors, switches, hose, etc.), are subject to the warranty, if any, of their manufacturer. Graco will provide purchaser with reasonable assistance in making any claim for breach of these warranties.

In no event will Graco be liable for indirect, incidental, special or consequential damages resulting from Graco supplying equipment hereunder, or the furnishing, performance, or use of any products or other goods sold hereto, whether due to a breach of contract, breach of warranty, the negligence of Graco, or otherwise.

FOR GRACO CANADA CUSTOMERS
The Parties acknowledge that they have required that the present document, as well as all documents, notices and legal proceedings entered into, given or instituted pursuant hereto or relating directly or indirectly hereto, be drawn up in English. Les parties reconnaissent avoir convenu que la rédaction du présente document sera en Anglais, ainsi que tous documents, avis et procédures judiciaires exécutés, donnés ou intentés, à la suite de ou en rapport, directement ou indirectement, avec les procédures concernées.

Graco Information

For the latest information about Graco products, visit www.graco.com.
For patent information, see www.graco.com/patents.

TO PLACE AN ORDER, contact your Graco distributor or call to identify the distributor closest to you:
Phone: 612–623–6921 or **Toll Free:** 1–800–328–0211 **Fax:** 612–378–3505

goind.com.au

All written and visual data contained in this document reflects the latest product information available at the time of publication. Graco reserves the right to make changes at any time without notice.

Original instructions. This manual contains English. MM 308553

Graco Headquarters: Minneapolis
International Offices: Belgium, China, Japan, Korea

GRACO INC. AND SUBSIDIARIES P.O. BOX 1441 MINNEAPOLIS, MN 55440–1441 USA
Copyright 1995, Graco Inc. All Graco manufacturing locations are registered to ISO 9001.
www.graco.com
Revision ZAD, January 2015