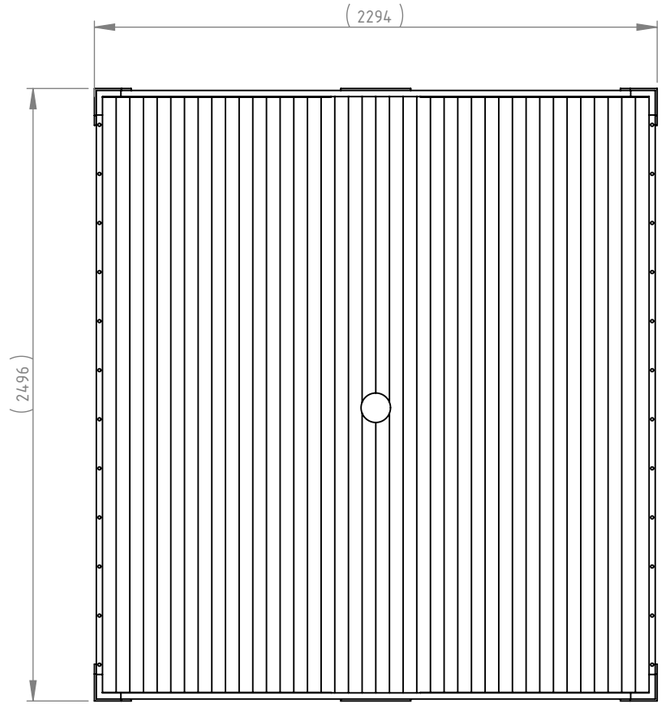

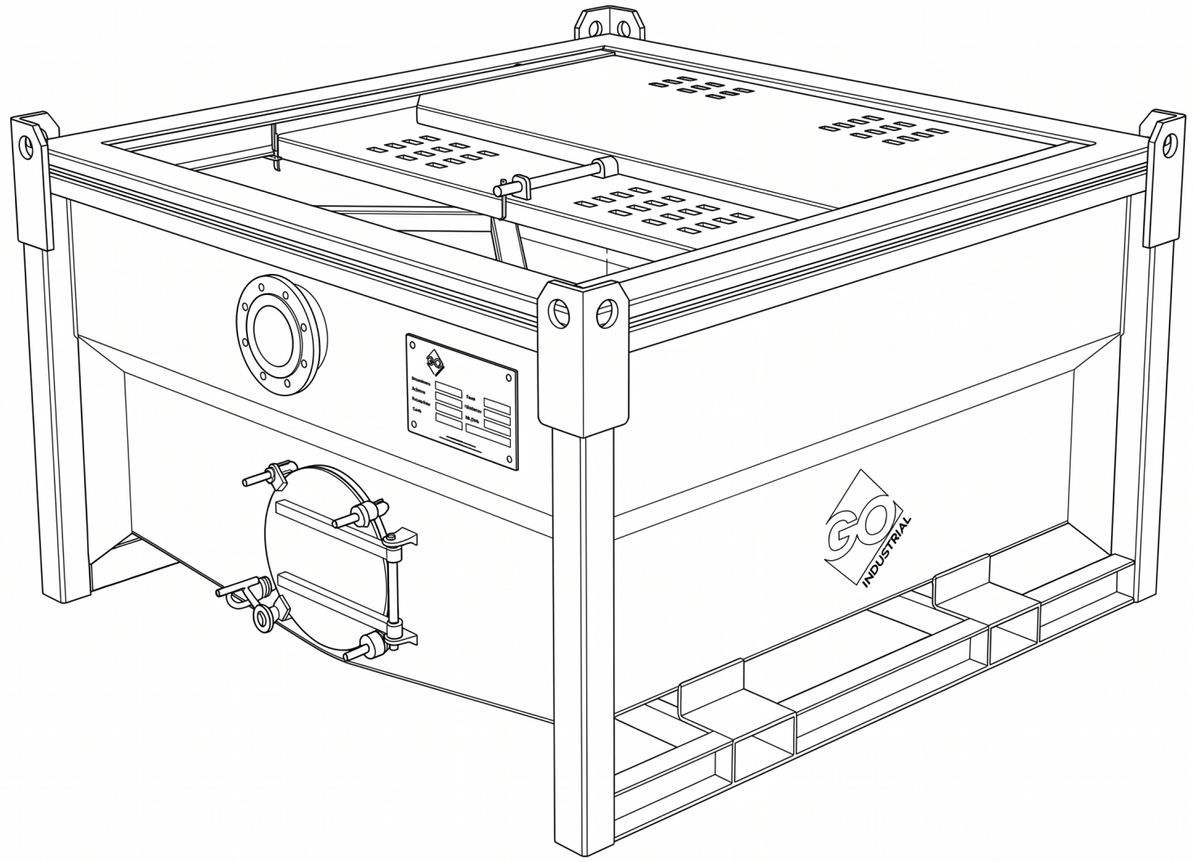

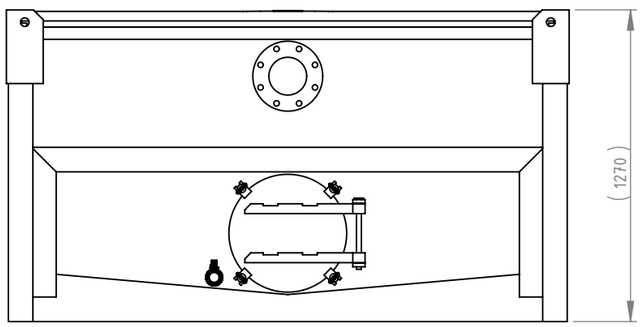

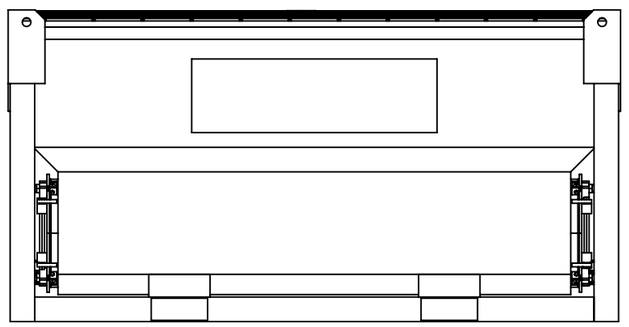

GO INDUSTRIAL

PROJECT: FILTRATION TANK			REV: 1
DESCRIPTION: SILT TANK SET 4.2			
MATERIAL: MILD STEEL			
FINISH: PAINTED			JOB NO.: GO68257
DRAWING TYPE: PART		DATE: 08/10/2026	
INITIAL DESIGNER: ZC		UNITS: mm	
REVISION CHANGES ARE SHOWN WITH: Δ	SCALE: 1:25	SHEET 1of 3	A3

TOLERANCES UNLESS OTHERWISE STATED: ± 1MM

LINEAR DIMENSIONS, DXF PROFILES AND 3D GEOMETRY: ± 1MM

ALL DIMENSIONS WITH <CC>,<SC> AND ⬭ ARE INSPECTION DIMENSIONS.

REFER TO 3D FILE OR DXF FOR FURTHER INFORMATION

DO NOT SCALE DRAWING

DRAWING STANDARD ISO

THIRD ANGLE PROJECTION

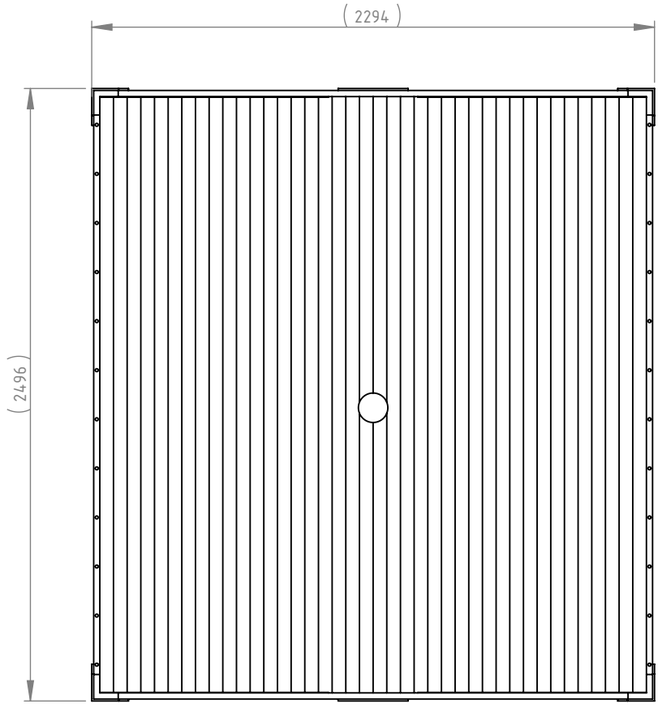

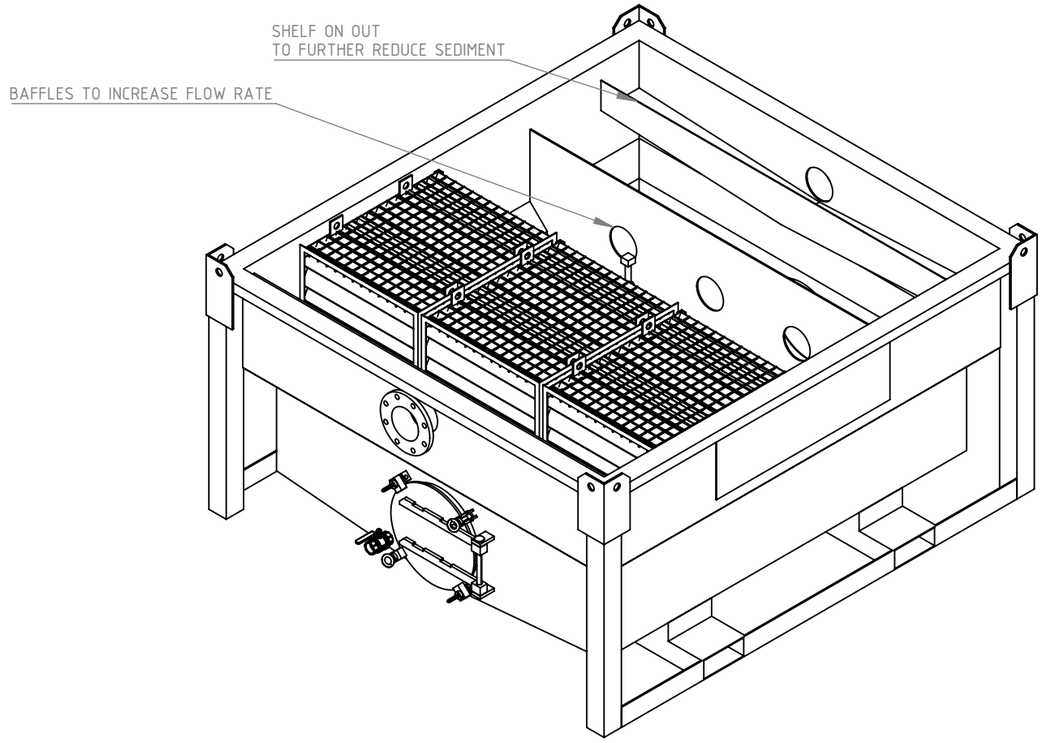

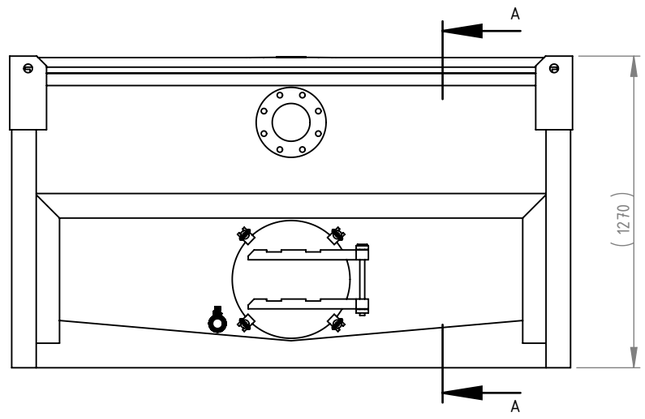

THE TANK SIZE HAS BEEN REDUCED SO IT FITS INSIDE A SHIPPING CONTAINER FOR TRANSPORT.
AT 1270 mm HIGH, IT IS 350 mm LOWER THAN THE 1620 mm TS5, SO IT CANNOT HOLD THE FULL 5000 L.
WITH THE TS5-STYLE 45° INSET LOWER WALLS, THE GROSS CAPACITY TO THE RIM IS 4288 L,
ABOUT 14% LESS THAN THE TS5. THE WORKING VOLUME, MEASURED TO THE OUTLET INVERT AT 923 mm, IS 3212 L.
STRAIGHT LOWER WALLS WOULD RAISE THE GROSS CAPACITY TO 4688 L, BUT THE TANK WOULD NO LONGER MATCH THE TS5 SHAPE.

GO INDUSTRIAL

PROJECT: FILTRATION TANK | REV: 1
DESCRIPTION: SILT TANK SET-4.2
MATERIAL: MILD STEEL
FINISH: PAINTED | JOB NO.: GO68257
DRAWING TYPE: PART | DATE: 08/10/2026
INITIAL DESIGNER: ZC | UNITS: mm
REVISION CHANGES ARE SHOWN WITH: △ | SCALE: 1:25 | SHEET 2of 3 | A3

TOLERANCES UNLESS OTHERWISE STATED: ± 1MM
LINEAR DIMENSIONS, DXF PROFILES AND 3D GEOMETRY: ± 1MM

ALL DIMENSIONS WITH <CC> <SC> AND ⬭ ARE INSPECTION DIMENSIONS.
REFER TO 3D FILE OR DXF FOR FURTHER INFORMATION

DO NOT SCALE DRAWING
DRAWING STANDARD ISO
THIRD ANGLE PROJECTION

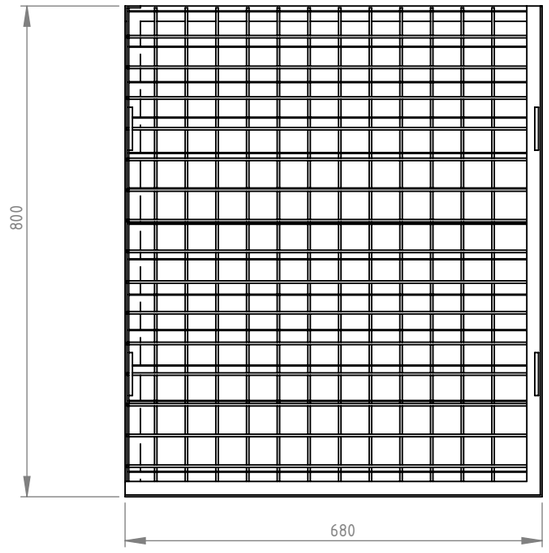

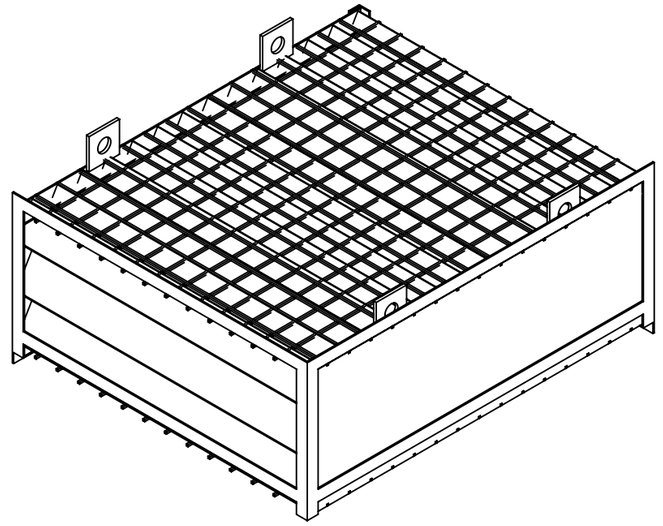

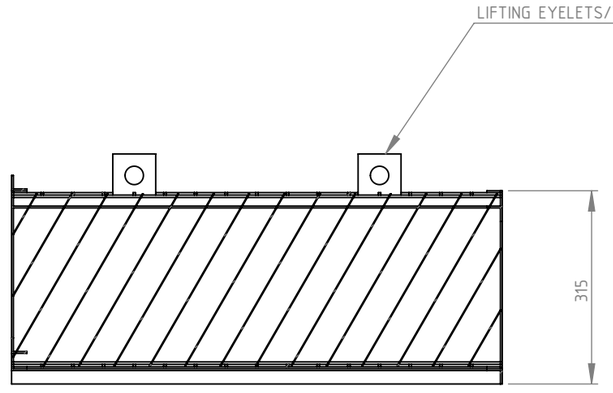

SECTION B-B

UPFLOW SETTLING CAGE CONCEPT

THIS CAGE REPLACES THE PVC OFFCUT FILL IN THE EXISTING BASKETS. WATER ENTERS THROUGH THE BOTTOM MESH AND RISES BETWEEN 16 INCLINED PLATES OF 1.2 mm 304 STAINLESS STEEL SET AT 60° AND SPACED 50 mm APART. SILT SETTLES ONTO THE PLATES AND SLIDES DOWN TO THE TANK FLOOR. CLEAN WATER LEAVES THROUGH THE TOP MESH AND FLOWS OVER INTO THE NEXT SECTION. THE STAINLESS PLATES SHED NO MICROPLASTICS INTO THE DISCHARGE. THE CAGE LIFTS OUT AS ONE UNIT ON FOUR LUGS FOR CLEANING WITH A HOSE. AT 5 L/s, THE PLATES ARE ESTIMATED TO SETTLE OUT PARTICLES DOWN TO ABOUT 35 MICRON. THE CAGE IS 800 X 680 X 290 mm, WITH AN ANGLE FRAME AND SLOTTED SIDE PLATES THAT HOLD THE PLATE PACK. CONCEPT ONLY; ALL SIZES TO BE CONFIRMED.

GO INDUSTRIAL

PROJECT: FILTRATION TANK | REV: 1

DESCRIPTION: SILT TANK SET-4.2

MATERIAL: SEE BOM

TOLERANCES UNLESS OTHERWISE STATED: ± 1MM

LINEAR DIMENSIONS, DXF PROFILES AND 3D GEOMETRY: ± 1MM

ALL DIMENSIONS WITH <CC> <SC> AND ⬭ ARE INSPECTION DIMENSIONS.

REFER TO 3D FILE OR DXF FOR FURTHER INFORMATION

DO NOT SCALE DRAWING

DRAWING STANDARD ISO

THIRD ANGLE PROJECTION

FINISH: SEE BOM

DRAWING TYPE: ASSEMBLY | DATE: 08/10/2026

JOB NO.: **GO68257**

INITIAL DESIGNER: ZC | UNITS: mm

REVISION CHANGES ARE SHOWN WITH: △

SCALE: 1:10 | SHEET 3of 3 | A3